版权所有翻版必究
ALL RIGHT RESERVED
VER: OIL-23-01/1008

宁 波 欧 易 液 压 有 限 公 司
NINGBO OIL CONTROL HYDRAULIC CO., LTD.
宁 波 英 特 姆 液 压 马 达 有 限 公 司
NINGBO INTERMOT HYDRAULIC MOTOR CO., LTD.

地　　址：宁波市镇海区镇骆东路1258号
邮　　编：315207
销售热线：0086-574-8626 2917
传　　真：0086-574-8626 0912
E - mail: sales@chinaintermot.com.cn

Add: No.1258,East Zhenluo Road,Zhenhai,Ningbo,P.R.China
P.C.: 315207
Tel: +86 574 8626 2917
Fax: +86 574 86260912
E-mail: sales@chinaintermot.com.cn

广东办事处

地　　址：广东省东莞市万江区蚬涌企石商业街振兴路8号133
邮　　编：523069
总　　机：0086-769-2217 8605
传　　真：0086-769-2270 9005
E - mail: intermot@163.com

GuangDong Office

Tel: +86 769 22178605
Fax: +86 769 22709005

Web: http://www.chinaintermot.com.cn www.nhm.com.cn

intermot® NHM® 英特姆®

afaq TAF Management System Certification MS012 中意合资 Sino-Italian JV

RM & PMS Series

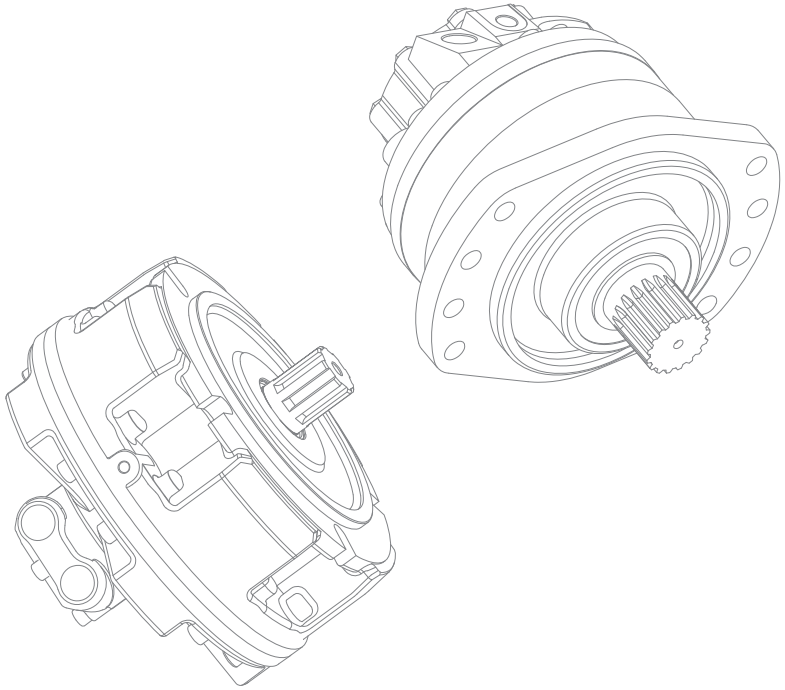

http://www.chinaintermot.com.cn
NINGBO OIL CONTROL HYDRAULIC CO., LTD.
NINGBO INTERMOT HYDRAULIC MOTOR CO., LTD.

企业简介

宁波欧易液压有限公司是由宁波英特姆液压马达有限公司发展而来，公司成立于1992年，是百年意大利英特姆公司(INTERMOT S.r.l.)、意大利液压研发有限公司(R&D S.r.l.)和意大利SAI S.p.a.公司控股与中方合资建立的专业制造液压马达的合资企业，承袭欧洲经典，专注品质发展。

公司依托于意大利专业的液压技术和严谨的制造工艺，致力为客户创造价值，用现代化管理理念，积极建设公司企业文化，持续追求卓越创新，公司已成为液压马达行业的知名品牌。

三十余年来，公司始终秉承强技术的基因和血液，是业内品种最多，规格最全，市场占有率高的液压马达生产企业。公司连续20多年被评为国家级高新技术企业，拥有发明、实用新型专利达60余项，是《低速大转矩液压马达》全国行业标准起草单位，浙江省和宁波市"专精特新"小巨人企业，拥有省级高新技术研发中心——欧易液压传动与控制研发中心；最早并连续获得宁波名牌产品、浙江省著名商标、宁波市人民政府科学技术奖、宁波市镇海区政府质量奖等殊荣。公司由数名高工和硕士成立产品研发中心，与国内外的科研单位、知名高校联合建立了长期友好产学研合作，与浙大机械工程系合作，共建浙江大学专业学位研究生实习基地。公司研发中心人员占比40%，在公司奉献了10年以上的员工占比超过50%，强大的研发团队和稳定的员工队伍奠定了企业的技术和品质。

目前公司拥有两万多平方米的现代化厂房，多台日本、欧洲进口的全自动综合加工中心和数控机床等高品质设备，结合MES、ERP、PLM管理系统，建立WMS智能仓储等智慧生产系统，打造了5G+工业互联网数字化绿色工厂，拥有ISO9001:2015的质量体系认证和多个国际船级社认证。在深耕塑机市场的同时，公司努力往多元化方向拓展，在船舶机械、煤矿机械行业都取得了质的飞跃，先后获得英国劳氏LR、美国ABS、法国BV、挪威DNV、日本ClassNK、中国CCS船级等国内外多个权威机构认证，2022年度获得央企的致重要配套供应商的感谢状，公司以高品质的产品作为国产替代助力客户降低成本。

近年来，公司紧跟市场发展步伐，针对客户的多样化需求，预先沟通量身定制个性化解决方案，在原先NHM系列曲轴连杆式液压马达基础上，不断开发新产品，公司现有产品系列包括GHM系列改进型高性能液压马达，FMB系列静压平衡曲轴连杆式液压马达，FMC系列静压平衡曲轴连杆式双速液压马达，F系列静压平衡曲轴连杆式平面配油液压马达，CM系列球面曲轴无连杆式耐高压液压马达，RM系列曲轴摆缸径向柱塞式液压马达，PMS系列多作用内曲线径向柱塞式液压马达，EPMZ系列摆线齿轮式液压马达，OILE电预塑减速机，OILW行走减速机，OILP行星减速机，OILH液压绞车等；同时公司多年代理保加利亚"M+S"摆线马达、济宁伊顿摆线马达等液压产品。这些产品广泛应用于矿山建筑、工程机械、起重运输设备、重型冶金机械、石油煤矿机械、船舶甲板机械、机床、塑料机械、地质钻探设备等各种机械的液压传动系统中，特别适用于注塑机的螺杆驱动、提升绞盘、卷筒的驱动、各种回转机构的驱动、履带和轮子行走机构的驱动等传动机械。

面对瞬息万变的市场需求，公司始终坚持"时刻对产品负责，永远让顾客满意"这一质量方针，持续深化内部改革，运用智能制造紧跟注塑机、船舶行业内领头企业的发展步伐，携手并进。展望未来，欧易公司积极拥抱电动化变革，愿以有形的产品汇聚成无形的力量，不拘于做液压马达的先驱，更要创液压马达的未来，成为中国液压行业最具竞争力的企业。

ABOUT US

NINGBO OIL CONTROL HYDRAULIC CO., LTD. is a Sino-Italian Joint venture specializing in developing and manufacturing of hydraulic motor, gearbox, hydraulic winch and other hydraulic transmission products. Inheriting from its predecessor NINGBO INTERMOT HYDRAULIC MOTOR CO., LTD., co-invested by INTERMOT S.r.l. (Italy), R&D S.r.l. (Italy) and the holding parent entity of SAI S.p.a. (Italy), NINGBO OIL CONTROL HYDRAULIC has more than 30 years of professional experience and in-depth know-how in the hydraulic industry.

Relying on the advanced hydraulic technology and rigorous manufacturing process from Italy, NINGBO OIL CONTROL is committed to creating value for customers and helping them succeed. The company integrates the complete corporate functions of R&D, designing & proto-typing, manufacturing, testing and marketing. With the implantation of modern management methods, we persist in the active development of corporate value and cultures whereas Continuous Innovation remains the constant pursuit of the company. Our product range covers a vast variety of applications throughout the world with INTERMOT brand renowned for its outstanding price for value.

Since the foundation of the joint venture in China 30+ years ago, the strong technical genes and blood has been driving us to become a competitive professional hydraulic motor manufacturer with the most comprehensive varieties of product portfolio to fulfill customer demands. As the high market shareholder, Ningbo Oil Control has been qualified as The High-tech Innovation enterprise for 20+ consecutive years and possesses more than 60 intellectual patents including inventions and utility models. Notably, R&D personnel accounts for about 40% of the total staff headcount with more than 50% of the employees have 10+ years of professional service experience with the company. Moreover, as the S.R.D.I. innovative enterprise of Zhejiang province, we have set up a provincial level high-tech R&D center namely-Transmission and Control Engineering R&D Center, and continue to expand the high-quality R&D team composed of scientific and technological talents, which inject strong vitality and Bionery of the enterprise. Too numerous to mention, honors and awards we have obtained over the years include: The Famous Trademark of Ningbo, The Famous Trademark of Zhejiang Province, Municipal Government Science and Technology Award, Municipal Government Quality Award, etc. and various Excellent Supplier Awards by various customer enterprises. As a long-term strategic partner with many first-tier international brands, Ningbo Oil Control always maintains an in-depth cooperative relationship with Zhejiang University and other competitive institutes, dedicated to becoming a leading hydraulic motor manufacturer.

At present, the company has a modern production workshop of 20,000 square meters, and has invested in many high-quality equipments such as fully automatic comprehensive machining centers and CNC machine tools, i.e. DMG MORI flexible machining system, Yamazaki Mazak, Doosan, etc. imported from Japan and Europe, intermot managed to debut the first integrated assembly line in the segmented industry of hydraulic motor, Meanwhile, Ningbo Intermot is committed to synchronizing with the rapid booming digital transformation in today's manufacturing industry in China. Continual introduction of PLM, MES systems and smart production systems, such as WMS (Warehouse Managing System) contributes significantly to the improvement of production efficiency and consistency. Ningbo intermot takes the creed of "Master piece Every piece" and constantly optimize its internal quality control standardizes the testing systems. We successfully passed the ISO9001:2015 quality system certification and product inspection certification of CCS, BV, NK, Lloyds ,ABS, DNV, international Classification Societies. Quality-wise, Ningbo Intermot is keen to provide the customers with excellent products and services in return for their trust and supports.

Our main product range includes: NHM series, GHM series, CM series, FMB (fixed disp.) / FMC(dual-disp.) series of low- speed high-torque hydraulic motor, RM (Swivel cylinder crankshaft) series, PMS (Radial Cam-ring) series LSHT hydraulic motor, OILW travel gearbox, OILP planetary gearbox, OILH hydraulic winch, EPMZ orbit hydraulic motor. Meanwhile, we are also the distributor of the hydraulic products such as 'M+S' orbit motor of Bulgaria and orbit motor of Eton Jining. Our application field covers engineering, hoisting and transportation, metallurgic and heavy duty machinery, oil extraction, coal mining, marine applications, machine tools, plastic molding machines, geological prospecting and other hydraulic transmission systems. Our products are particularly suitable for driving injection mounding machine, lifting screw drives, driving winch and various rolling drums, as well as other transmission mechanics like track and wheel machines. Confronting with the challenge of the new century, we always honor our quality slogan, being 'Take responsibility for our products and services, while fulfilling the actual demands of our customers'. In pursuit of quality, we are keen to provide our customers with reliable products and services, striving to be the leader in the hydraulic motor sector in China.

目录/Contents

RM系列液压马达/RM Series Hydraulic Motors

1、产品特点/ Product Feature A01
2、结构原理/ Structure Principle A01
3、计算公式/Calculation A02
4、产品标识说明/ Ordering Code A02
5、技术性能参数/Technical Specification A03
6、RM05-60 ~ 200安装联接尺寸/Installation Dimensions A04
7、RM1-100 ~ 350安装联接尺寸/ Installation Dimensions A05
8、RM2-200 ~ 630安装联接尺寸/ Installation Dimensions A06
9、RM3-425 ~ 1000安装联接尺寸/ Installation Dimensions A07
10、RM4-600 ~ 1300安装联接尺寸/ Installation Dimensions A08
11、RM5-800 ~ 2000安装联接尺寸/ Installation Dimensions A09
12、RM6-1700 ~ 3000安装联接尺寸/ Installation Dimensions A10

PMS/PMSE系列液压马达/PMS/PMSE Series Hydraulic Motors

1、产品特点/Product Feature B01
2、PMS/PMSE02系列马达PMS/PMSE02 Series Motor B01-B08
技术参数Technical Specification B01
产品标识说明/Ordering Code B02
安装联接尺寸/Installation Dimensions B03
3、PMS/PMSE05系列马达PMS/PMSE05 Series Motor B09-B15
技术参数Technical Specification B09
产品标识说明/Ordering Code B09
安装联接尺寸/Installation Dimensions B10
4、PMS/PMSE08系列马达PMS/PMSE08 Series Motor B16-B22
技术参数/Technical Specification B16
产品标识说明/Ordering Code B16
安装联接尺寸/ Installation Dimensions B17
5、PMS/PMSE11系列马达PMS/PMSE11 Series Motor B23-B29
技术参数Technical Specification B23
产品标识说明/ Ordering Code B23
安装联接尺寸/Installation Dimensions B24
6、PMS/PMSE18系列马达PMS/PMSE18 Series Motor B30-B36
技术参数/Technical Specification B30
产品标识说明/Ordering Code B30
安装联接尺寸/ Installation Dimensions B31
7、PMS35系列马达PMS35 Series Motor B37-B41
技术参数/Technical Specification B37
产品标识说明/Ordering Code B37
安装联接尺寸/Installation Dimensions B38
8、PMS50 系列马达/PMS50 Series Motor B42-B47
技术参数/Technical Specification B42
产品标识说明/Ordering Code B42
安装联接尺寸/ Installation Dimensions B43
9、PMS83 系列马达/PMS83 Series Motor B48-B53
技术参数/Technical Specification B48
产品标识说明/Ordering Code B48
安装联接尺寸/ Installation Dimensions B49
10、PMS125 系列马达/PMS125 Series Motor B54-B59
技术参数/Technical Specification B54
产品标识说明/Ordering Code B54
安装联接尺寸/ Installation Dimensions B55

RM 系列/Series

产品特点 /Product Feature

RM系列曲轴摆缸式液压马达是我司结合多年的生产经验，在意大利母公司技术的基础上进行了设计改进，使该系列马达壳体强度增加，内部动态元件承载能力增强。这一特点使该系列马达具有很高的连续功率范围。由于机械效率和容积效率高，同时又减少了内部的单位负载力，因此减少了热量产生以及与此有关的负面效应。其主要特点如下：

●由于活塞与摆缸不存在侧向力，活塞底部设计成静压平衡，活塞与曲轴之间通过滚动轴承传递扭力，这些均减少了传力过程中的摩擦损失。因此RM系列液压马达具有很高的机械效率、高的启动扭矩（启动时机械效率92%以上）的特点。
●平面配油器简单可靠，密封性好，泄露量很小。活塞与摆缸之间用塑料活塞密封无泄漏，因而有很高的容积效率（可达98%）。
●由于在结构上减少了摩擦损失，提高了密封性能和抗污能力，因而提高了低速稳定性和工作可靠性。
●由于活塞与轴承套通过卡环贴牢，不存在间隙，因而该系列液压马达可以作泵工况下运转，当进油口封闭后马达可在自由轮工况下高速动作。
●该系列液压马达工作压力高、重量轻、体积小、功率高。
●由于结构简单，设计合理，采用负荷能力大的轴承，因而工作可靠、寿命长、噪音低，传动轴允许承受径向力，旋转方向可逆。

RM series crankshaft swivel cylinder hydraulic motors, the heart-and-soul masterpiece created with years of expertise inherited from the parent company in Italy, integrate multiple design innovations with respect to the variations intended to augment the strength of the motor casings and the load capacity of the internal dynamic components. The design offers high continuous power ratings, due to the reduced internal specific loads, and high mechanical and volumetric efficiency which contribute in lowering the heat produced together with the negative effects associated with it. The main characteristics about RM design are as follows:

●The side loading between the piston and swiveling cylinder is eliminated; the hydrostatic balance is therefore achieved between the friction pairs; the pistons transmit work-load to the crankshaft via a rolling bearing. Many more efforts are put into the design to reduce the friction loss in the load transmission, as a result, the RM series hydraulic motor features high mechanical efficiency and high starting torque (above92%).
●Rotary axial distributor ensures simple but reliable performance, good sealing capability and low leakage. The plastic piston ring between piston and cylinder effectively reduces the leakage, and therefore, realize the high volumetric efficiency of the motor (more than 98%).
●Due to the reduced friction loss with the design, improved sealing capability and anti-pollution capacity, the motor can operate at low speed with a high degree of speed stability and reliability.
●The pistons and spherical crank surface are well-coupled to eliminate the pair clearance. The RM motors can run in pump condition. In some specific cases, when the inlet port and/or outlet is closed, the motor could run in freewheeling condition.
●The series motor features high pressure rating, with light weight、compact size、and high output power .
●Due to the simple structure under the considerate design, and applying the large-load capacity bearings, the series motors offer outstanding features as high reliability, long service life and low noise, as well as strong endurance of radial force on the output shaft and the rotation direction of the shaft is reversable.

结构原理 /Structure Principle

液压油通过配油盘进入摆缸腔体内，在活塞上产生推力，该推力直接作用在曲轴中心，由于各个活塞产生的推力大小和方向各不相同，使曲轴在合力的作用下旋转，同时带动配油盘一起转动。当活塞所在位置到达下死点时，活塞便由配油盘接通回油口，活塞便被曲轴往上推，此时做功后的液压油通过配油盘返回油箱。各活塞一次接通高低压液压油，各活塞对曲轴中心所产生的驱动力矩同向相加，使马达输出轴获得连续而平稳的回转扭矩。当改变油流方向时，便可改变马达的旋转方向。如将配油盘转 180°装配，也可以实现马达的反转。

Hydraulic fluid enters into the swivel cylinder cavity through the oil distribution valve and generates thrust on the pistons. Such thrust acts directly on the center of the spherical crankshaft. As the force and direction of the thrust generated by each piston is different, the crankshaft rotates under the combined forces and drives the oil distribution valve to rotate synchronously with the connecting rotation mechanism. When a typical piston reaches the bottom dead center, the piston is connected to the oil circuit (return port) through the oil distribution valve, and the piston is thereby pushed up by the crankshaft. At this moment, the pressurized hydraulic fluid after work returns to the oil tank through the oil distributor. Each piston is alternately connected with high and low pressure hydraulic oil at each work cycle, and the driving torque generated by each piston to the crankshaft center is superimposed in the same direction, so that the motor output shaft obtains continuous and stable turning torque. When the direction of oil flow is reversed, the direction in which the motor rotates will then be reversed. Alternatively, if the oil distribution valve plate is assembled by turning 180°, the motor shaft rotation direction will also be reversed.

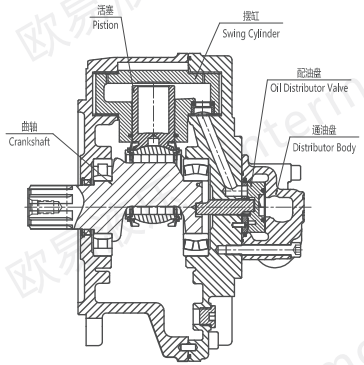

计算公式/Calculation

1. 液压马达的实际输出扭矩 Actual output torque of the hydraulic motor:

   $M=0.159\times(P1-P2)\times V\times\eta_m$(N.m)

   P1----------液压马达的入口压力 Pressure at inlet hydraulic motor(MPa)

   P2----------液压马达的出口压力 Pressure at outlet hydraulic motor(MPa)

   V----------液压马达的排量 Displacement of hydraulic motor(mL/r)

   η_m ----------液压马达的机械效率 Mechanical efficiency of hydraulic motor

2. 液压马达的输出功率 Output power of hydraulic motor:

   $N=M\times n\div 9550$(kW) $N=q\times(P1-P2)\times\eta_m\times\eta_v\div 6000$(kW)

   n----------液压马达的转速 Rotation speed of hydraulic motor(r/min)

   q----------液压马达的输入流量 Flow of hydraulic motor(ml/min)

   η_v ----------液压马达的容积效率 Volumetric efficiency of hydraulic motor

3. 液压马达的转速 Rotating of hydraulic motor:

   $n=q\div V\times\eta_v$(r/min)

产品标识说明 /Ordering Code

RM □-□ □-□-□

- 配流器型号(订货时必须注明)Distributor(remarked when ording)
  具体型号详见样本配流器部分More details to see the catalogue
- 轴承代号Bearings:
  无代号表示滚柱轴承No letters means ball bearings
  GP表示球面滚柱轴承，在马达盖端(1-3系列)
  GP means spherical roller bearing in the motor cover(1-3 series)
  G表示球面滚柱轴承(4-6系列)G means spherical roller bearing(4-6series)
- 输出轴形式(订货时必须注明)Form of output shaft（must be specified when ordering）:
  无字母表示标准矩形花键轴，A表示渐开线花键轴，B表示平键轴，I表示内花键轴
  Standard rectangular spline shaft without letters，A means involute shaft，
  B maens flat key shaft，I maens internal spline shaft
- 名义排量Nominal displacement(mL/r)
- 系列代号（不同排量同一系列其安装尺寸相同）
  Series code(the installation size of the same series with different displacement is the same)
- RM摆缸曲轴式径向柱塞马达 RM swing cylinder crankshaft radial piston motor

型号举例 /Example

RM2-420B-D40 表示 RM2 系列液压马达，排量为 425mL/r，输出轴为平键轴，轴承为滚柱轴承，配油器型号为 D40。

RM2-420B-D40 refers to RM2 series hydraulic motor .The displacement is 425mL/r，B stands for the output shaft is flat key shaft .the bearings are roller bearings, and the distributor model is D40.

技术性能参数 /Technical Specification

型号 Type		排量 Displacement (ml/r)	压力 Pressure(MPa) 额定压力 Rated Pressure	最高压力 Max.Pressure	扭矩 Torque(N.m) 额定扭矩 Rated Torque	单位理论扭矩 Unit Toroue (N.m/MPa)	转速 Speed（r/min） 连续转速 Continuous Speed	最高转速 Max.Speed	重量 Weight (Kg)
RM05	RM05-60	59	21	25	193	9	1～700	1000	22
	RM05-75	74	21	25	242	12	1～700	1000	
	RM05-90	86	21	25	281	13	1～700	1000	
	RM05-110	115	21	25	376	18	1～650	900	
	RM05-130	129	21	25	422	20	1～650	900	
	RM05-150	151	21	25	494	24	1～650	900	
	RM05-170	166	21	25	543	26	1～600	800	
	RM05-200	191	21	25	625	30	1～600	800	
RM1	RM1-100	99	21	25	324	15	1～550	1000	31
	RM1-150	154	21	25	504	24	1～550	1000	
	RM1-175	172	21	25	563	27	1～550	900	
	RM1-200	201	21	25	658	31	1～550	800	
	RM1-250	243	21	25	795	38	1～450	700	
	RM1-300	290	21	25	949	45	1～350	650	
	RM1-320	314	21	25	1027	49	1～350	600	
	RM1-350	340	21	25	1113	53	1～350	600	
RM2	RM2-200	192	21	25	628	30	1～550	800	51
	RM2-250	251	21	25	821	39	1～550	800	
	RM2-300	304	21	25	995	47	1～500	750	
	RM2-350	347	21	25	1135	54	1～500	750	
	RM2-420	425	21	25	1391	66	1～450	750	
	RM2-500	493	21	25	1613	77	1～450	700	
	RM2-600	565	21	25	1849	88	1～450	700	
	RM2-630	623	21	25	2039	97	1～400	650	
RM3	RM3-425	426	21	25	1394	66	1～500	650	87
	RM3-500	486	21	25	1590	76	1～450	650	
	RM3-600	595	21	25	1947	93	1～450	575	
	RM3-700	690	21	25	2258	108	1～400	500	
	RM3-800	792	21	25	2592	123	1～400	500	
	RM3-900	873	21	25	2857	136	1～350	400	
	RM3-1000	987	21	25	3230	154	1～300	350	
RM4	RM4-600	616	21	25	2016	96	1～400	550	120
	RM4-800	793	21	25	2595	124	1～350	550	
	RM4-900	904	21	25	2958	141	1～325	450	
	RM4-1000	1022	21	25	3344	159	1～300	400	
	RM4-1100	1116	21	25	3652	174	1～275	400	
	RM4-1300	1316	21	25	4306	205	1～225	350	
RM5	RM5-800	807	21	25	2641	126	1～325	450	175
	RM5-1000	1039	21	25	3400	162	1～300	450	
	RM5-1200	1185	21	25	3878	185	1～300	400	
	RM5-1300	1340	21	25	4385	209	1～300	400	
	RM5-1450	1462	21	25	4784	228	1～275	350	
	RM5-1600	1634	21	25	5347	255	1～250	300	
	RM5-1800	1816	21	25	5942	283	1～250	300	
	RM5-2000	2007	21	25	6567	313	1～200	250	
RM6	RM6-1700	1690	21	25	5530	263	1～250	400	275
	RM6-2100	2127	21	25	6960	331	1～225	350	
	RM6-2500	2513	21	25	8223	392	1～200	300	
	RM6-3000	3041	21	25	9951	474	1～175	250	

以上数据为试验条件下实测所得，仅用于对产品描述及应用参考，因实际使用条件等诸多原因，不视为产品实际应用的性能保证。英特姆保留对样本中的产品参数、尺寸及其性能进行修改的权利，如有变更，恕不另行通知。版权所有，禁止未经过宁波欧易液压及英特姆公司书面授权的任何局部或者整体内容复制与使用。
The above data are measured and obtained under specific actual experimental conditions, and only for product description purposes. The data should not be interpreted as warranted characteristics in legal term. Ningbo intermot(Ningbo oil Control Hydraulic Co. Ltd.)reserves the rights to implement modifications without notice. All Partial or total reproduction and copy of such data without formal authorization is strictly forbidden.

RM05-60 ~ 200安装联接尺寸/Installation Dimensions

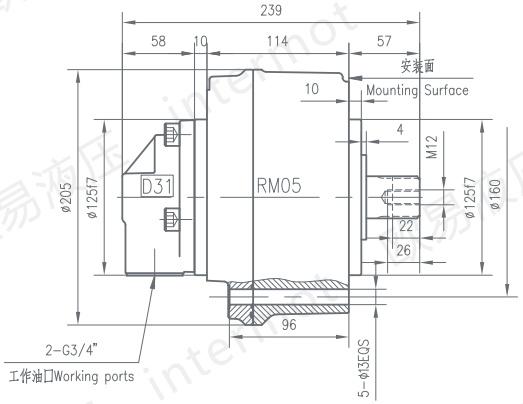

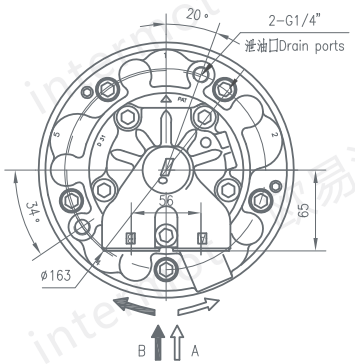

标准外花键 Standard Spline：
RM05-**

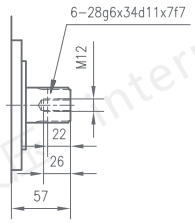

标准平键 Standard Parallel Key：
RM05-**B

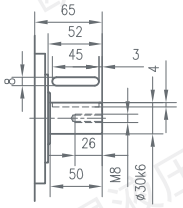

内花键 Internal Spline：
RM05-**I

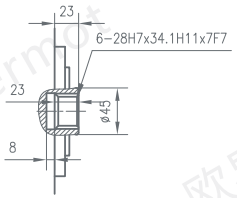

渐开线花键 Involute Spline：
RM05-**A

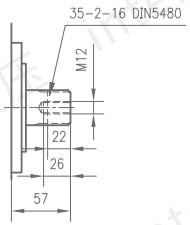

35-2-16 DIN5480花键参数 Splined date	
压力角 Pressure angle	30°
齿数 Number of teeth	16
模数 Modulus	2
齿高变位量 Shaft addendum modification	0.4
公差等级 Tolerance grade	7h
齿顶圆直径 Tip diameter	ø34.6h11
齿根圆直径 Root diamerer	ø30.6h14
跨齿数 Measured number of teeth	3
公法线长度 Base tangent length	15.493

INTERMOT
HYDRAULIC MOTOR

RM1-100 ~ 350安装联接尺寸/ Installation Dimensions

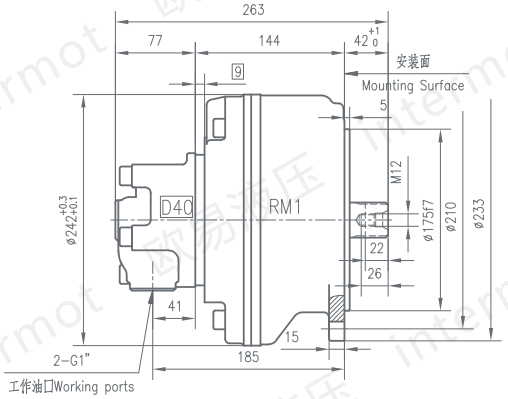

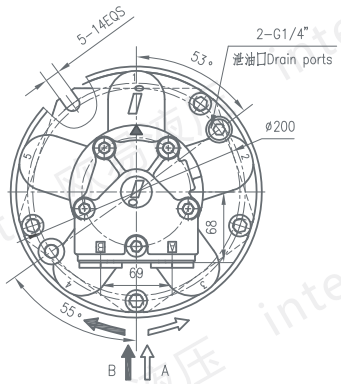

标准外花键 Standard Spline：
RM1-**

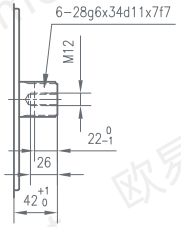

标准平键 Standard Parallel Key：
RM1-**B

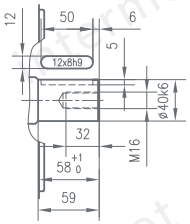

内花键 Internal Spline：
RM1-**I

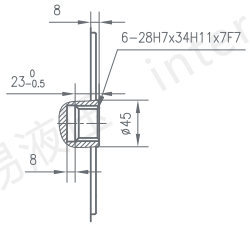

渐开线花键 Involute Spline：
RM1-**A

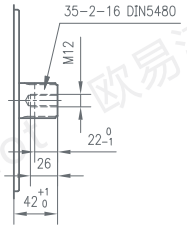

35-2-16 DIN5480花键参数 Splined date	
压力角 Pressure angle	30°
齿数 Number of teeth	16
模数 Modulus	2
齿高变位量 Shaft addendum modification	0.4
公差等级 Tolerance grade	7h
齿顶圆直径 Tip diameter	ø34.6h11
齿根圆直径 Root diamerer	ø30.6h14
跨齿数 Measured number of teeth	3
公法线长度 Base tangent length	15.493

RM2-200 ~ 630安装联接尺寸/ Installation Dimensions

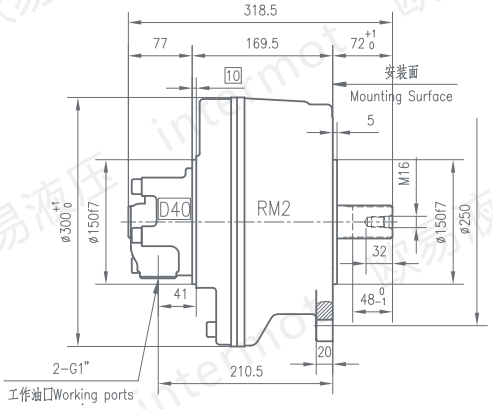

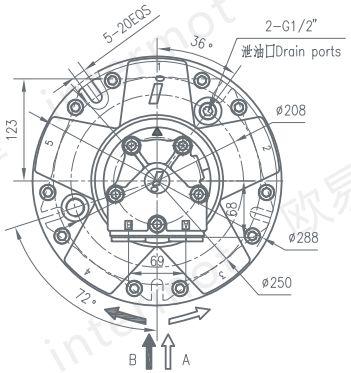

标准外花键 Standard Spline：
RM2-**

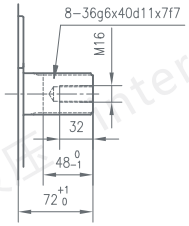

标准平键 Standard Parallel Key：
RM2-**B

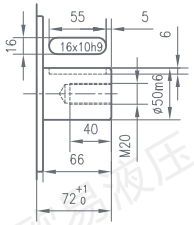

内花键 Internal Spline：
RM2-**I

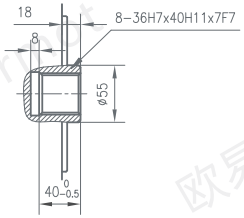

渐开线花键 Involute Spline：
RM2-**A

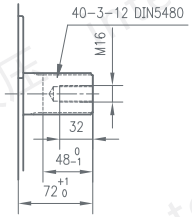

40-3-12 DIN5480花键参数 Splined date	
压力角 Pressure angle	30°
齿数 Number of teeth	12
模数 Modulus	3
齿高变位量 Shaft addendum modification	0.35
公差等级 Tolerance grade	7h
齿顶圆直径 Tip diameter	ø39.4h11
齿根圆直径 Root diamerer	ø33.4h14
跨齿数 Measured number of teeth	3
公法线长度 Base tangent length	22.431

INTERMOT
HYDRAULIC MOTOR

RM3-425 ~ 1000安装联接尺寸/ Installation Dimensions

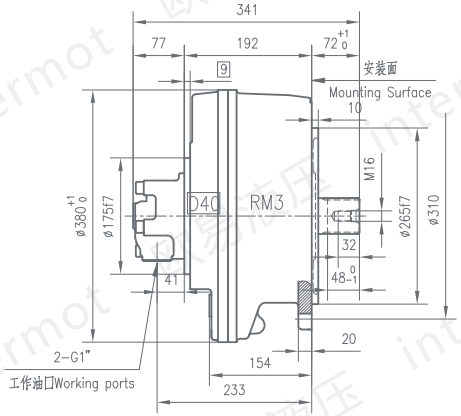

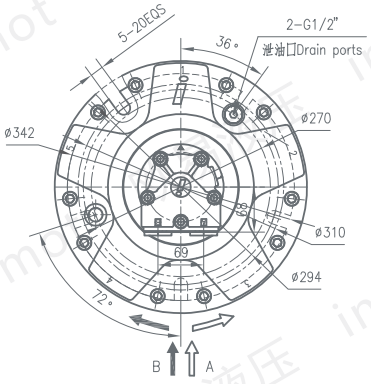

标准外花键 Standard Spline：
RM3-**

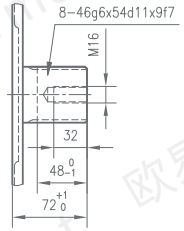

标准平键 Standard Parallel Key：
RM3-**B

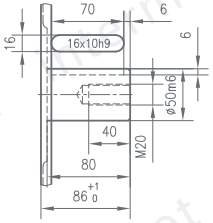

内花键 Internal Spline：
RM3-**I

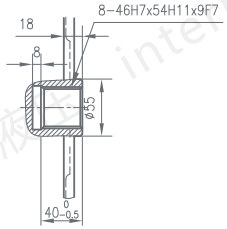

渐开线花键 Involute Spline：
RM3-**A

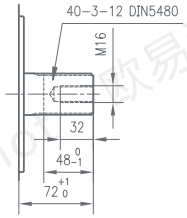

40-3-12 DIN5480花键参数 Splined date	
压力角 Pressure angle	30°
齿数 Number of teeth	12
模数 Modulus	3
齿高变位量 Shaft addendum modification	0.35
公差等级 Tolerance grade	7h
齿顶圆直径 Tip diameter	ø39.4h11
齿根圆直径 Root diamerer	ø33.4h14
跨齿数 Measured number of teeth	3
公法线长度 Base tangent length	22.431

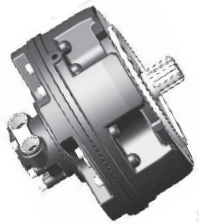

RM4-600 ~ 1300安装联接尺寸/ Installation Dimensions

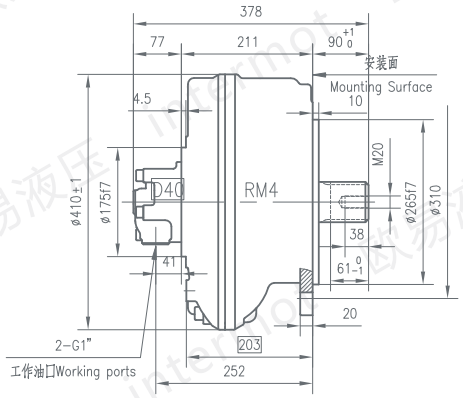

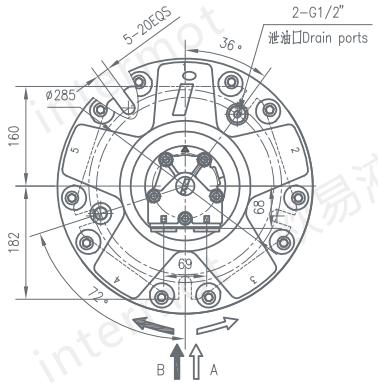

标准外花键 Standard Spline：

RM4-**

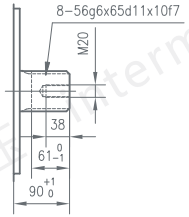

标准平键 Standard Parallel Key：

RM4-**B

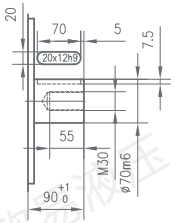

内花键 Internal Spline：

RM4-**I

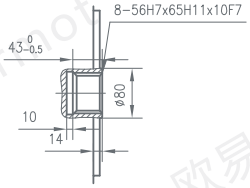

渐开线花键 Involute Spline：

RM4-**A

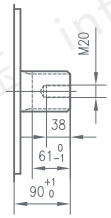

花键参数 Splined date	65-3-20 DIM5480	55-2-26 DIM5482	55-3-17 DIM5480
压力角 Pressure angle	30°	30°	30°
齿数 Number of teeth	20	26	17
模数 Modulus	3	2	3
齿高变位量 Shaft addendum modification	0.85	0.019	0.35
公差等级 Tolerance grade	7h	7h	7h
齿顶圆直径 Tip diameter	ø64.4h11	ø51.5h11	ø54.4h11
齿根圆直径 Root diamerer	ø58.4h14	ø49h14	ø48.4h14
跨齿数 Measured number of teeth	4	5	3
公法线长度 Base tangent length	32.21	27.307	23.129

RM5-800 ~ 2000安装联接尺寸/ Installation Dimensions

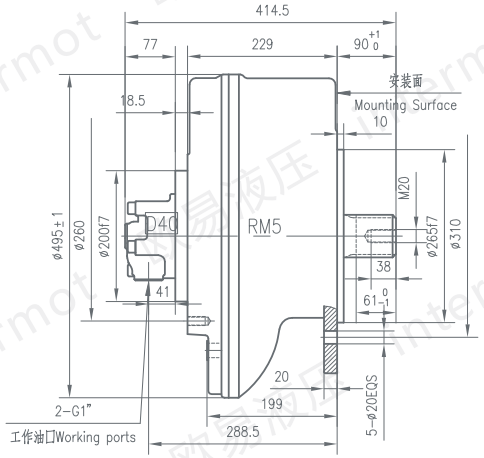

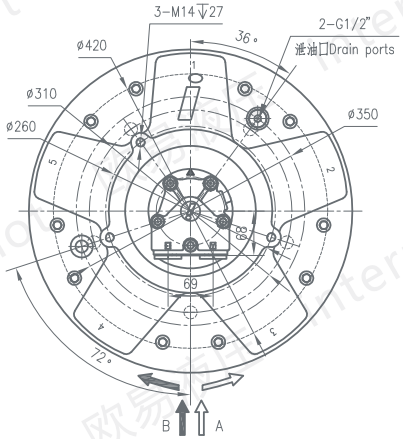

标准外花键 Standard Spline：

RM5-**

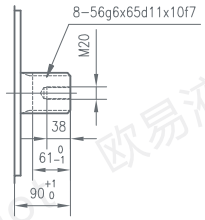

标准平键 Standard Parallel Key：

RM5-**B

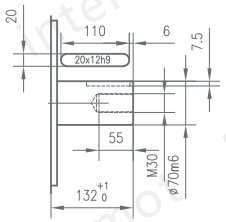

内花键 Internal Spline：

RM5-**I

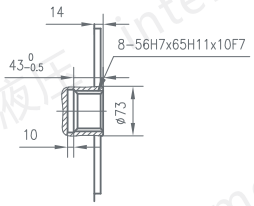

渐开线花键 Involute Spline：

RM5-**A

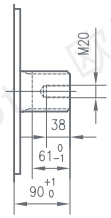

花键参数 Splined date	65-3-20 DIM5480	55-2-26 DIM5482	55-3-17 DIM5480
压力角 Pressure angle	30°	30°	30°
齿数 Number of teeth	20	26	17
模数 Modulus	3	2	3
齿高变位量 Shaft addendum modification	0.85	0.019	0.35
公差等级 Tolerance grade	7h	7h	7h
齿顶圆直径 Tip diameter	ø64.4h11	ø51.5h11	ø54.4h11
齿根圆直径 Root diamerer	ø58.4h14	ø49h14	ø48.4h14
跨齿数 Measured number of teeth	4	5	3
公法线长度 Base tangent length	32.21	27.307	23.129

intermot 欧易液压

RM6-1700 ~ 3000安装联接尺寸/ Installation Dimensions

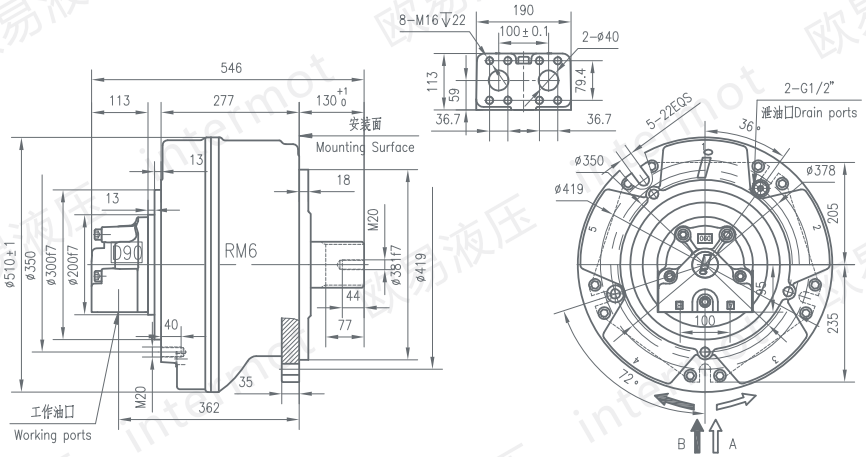

标准外花键 Standard Spline：
RM6-**

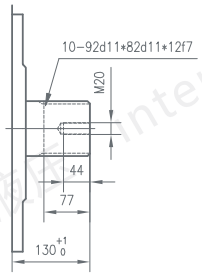

标准平键 Standard Parallel Key：
RM6-**B

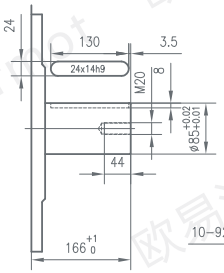

内花键 Internal Spline：
RM6-**I1

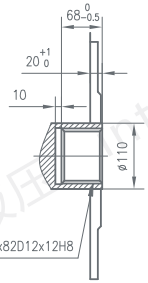

内花键 Internal Spline：
RM6-**I2

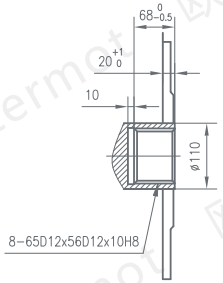

渐开线花键 Involute Spline：
RM6-**A1

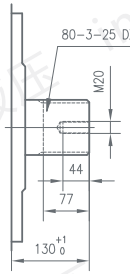

80-3-25 DIN5480花键参数 Splined date	
压力角 Pressure angle	30°
齿数 Number of teeth	25
模数 Modulus	3
齿高变位量 Shaft addendum modification	0.85
公差等级 Tolerance grade	7h
齿顶圆直径 Tip diameter	Ø79.4h11
齿根圆直径 Root diamerer	Ø73.4h14
跨齿数 Measured number of teeth	5
公法线长度 Base tangent length	41.071

渐开线花键 Involute Spline：
RM6-**A2

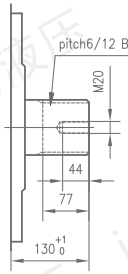

pitch6/12 BS3550花键参数 Splined date	
压力角 Pressure angle	30°
齿数 Number of teeth	20
径节 Pitch	6/12
大径 Major diameter	Ø87.953/87.83
渐开线起始圆直径 Form diameter	Ø80.264
小径 Minor diameter	Ø79.93/78.52
钢棒直径 Pin diamerer	Ø8.128
跨棒距 Diameter over pin	Ø97.082/97.03

PMS/PMSE系列/Series

产品特点 /Product Feature

PMS/PMSE 系列内曲线多作用径向低速大扭矩液压马达适应能力强，可广泛应用于船舶机械、工程机械、钻探设备、矿山机械、水泥设备、重型冶金、军工等多种领域，也可直接配置用于静液压传动装置中。

●产品整体为模块化设计，分输出模块、功能模块、配流模块、制动模块四部分。可根据主机企业的实际要求进行模块选定。可以减少客户的机械配置，使布局灵活、简单。
●输出模块采用双锥滚子轴承进行支承，可承受更大的径向力和轴向力。
●配流模块采用国际先进的端面配油模式，并具有自动磨损补偿功能，可长期保持液压马达较高的容积效率。
●功能模块采用了高承载、低摩擦、耐高温的高性能滑瓦，降低了机械摩擦损失，同时采用输出转矩，转速无脉动的导轨曲线设计，提高了液压马达整机工作的平稳性及抗冲击性能。
●新型复合强化处理技术在液压马达中的应用，大幅提高了零部件的抗疲劳性能，耐磨性以及防腐性能，整体提升了液压马达的使用寿命。

PMS/PMSE series' LSHT radial cam-ring hydraulic motors are widely applied in deck, construction, mining machinery, cement equipments,heavy metallurgy,military industry, and can be directly used in hydro static transmission units.

● The modular design of the product,output module, function module, flow-distribution module and brake module,enables customers to select according to their actual requirements, thus to reduce their mechanical configuration to make the whole layout flexible and simple.
● The output module of products applies biconical roller bearing to withstand stronger radial and axial force.
● The disc flow-distribution module features with automatic wear-compensation function, which keeps high volumetric efficiency of motors in long term.
● The Function module applies sliding shoe which features with high load, anti-friction and heat-resistance performance, to reduce mechanical friction loss, optimizes stator curves' design, thus to improve the running stability and impact-resistance of the motor.
● The application of new composite processing technology enhances fatigue,abrasive and correction resistance of the parts, thus to prolong the service life of the motor.Customers select according to their actual requirements,thus to reduce their mechanical configuration to make the whole layout flexible and simple.

PMS/PMSE02
技术参数表 /Technical Parameter

A: 全排量 First displacement
B: 半排量 Second displacement

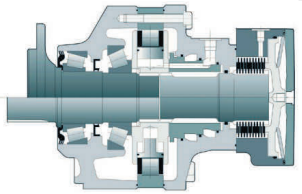

产品型号 Type	排量代号 Displacement Code	A	B	理论扭矩 Theoretical Torque	最大功率 Max.Power			最大转速 Max.Speed	最高压力 Max.Pressure
				A	A	B 优先旋向 / Preferred	B 非优先旋向 /Non-Preferred	B	
		ml/r	ml/r	100bar N.m	KW	KW	KW	r/min	bar
PMS02	8	172	86	273	18	12	9	390	450
	0	213	107	339				310	
	1	235	118	374				285	
	2	255	128	405				260	
PMSE02	0	332	166	528	22	16.5	11	200	400
	1	364	182	579				182	
	2	398	199	633				165	

产品标识说明 /Ordering Code

***** _ * _ *** _ *** _ **** _ ****

1 2 3 4 5 6 7 8

1、马达型号 Moter type
PMS/PMSE02

2、排量代号 Displacement Code
A: 全排量 First displacement B: 半排量 Second displacement

产品型号 Type	代号 Code	A ml/r	B ml/r
PMS02	8	172	86
	0	213	107
	1	235	118
	2	255	128
PMSE02	0	332	166
	1	364	182
	2	398	199

3、配流体形式 Valving type

单排量配流体	1
对称型配流体	A 排量比 2
	B 排量比 <2
	C 排量比 >2
双排量和配流体（顺时针方向）	D 排量比 2
	E 排量比 <2
	F 排量比 >2
双排量和配流体（逆时针方向）	G 排量比 2
	H 排量比 <2
	J 排量比 >2

4、安装法兰形式 Mounting options

不带安装法兰 Without mounting	1	4
带安装法兰 With mounting	2	5
1- 单排量 /1-Displacement 2- 双排量 /2-Displacement		热交换阀 Exchange

5、油口形式 Distributor
A——SAE 连接 /SAE connection 3——BSPP 连接 /BSPP connection

6、制动器 Brake
A02——无制动器（普通端盖）/Without brake(simple plate)
F03——带制动器 /With brake
R02——无制动器（加强端盖）Without brake(reinforced plate)

7、输出轴形式 Shaft options
0- 无轴承支撑 /Without bearing support
1- 无安装法兰 /Without mounting
2- 带安装法兰 /Lug mounting

0- 无伸出轴 /Without shaft
1-5×Ø 18，Ø 140
2-10×M12，Ø 100
A- 伸出轴承支撑 /For male shaft bearing support

1- 无螺栓 /Without studs
2- 螺栓螺母 /With studs+nuts
3- 螺栓 /With studs
4-M 螺纹孔 /M threaded holes

伸出轴 /Male shaft
5- 伸出轴 DIN5480 花键 /Male shaft din5480 splines
0- 无鼓式制动器 Without drum brakes

8、附加项 Additional items

0	无选项 With Options or Adaptations	6	工业轴承支撑 Industrial bearing support	H	高效率 High efficiency
1	氟化橡胶密封 Fluorinated elastomer seals	8	预留速度传感器位置 Predisposition for speed sensor	J	加强轴肩 Reinforced bearing stop
3	不带机械解除制动的端盖 Brake environmental cover without plug	B	轴承支撑上带泄油口 Drain on the bearing support	K	加强轴 Reinforced shaft
		D	特殊喷漆或无喷漆 Special paint or no paint	M	高速 Hight speed
5	泄油口（配流系统附加泄漏油口） Drainage(additional drain on valving systems)	E	加强轴封 Reinforced sealing		
		G	特殊轮辋安装 Special wheel rim mounting		

PMS/PMSE02 轮边马达 PMS/PMSE02 Wheel Motor

单排量马达（1110）标准尺寸 /Dimensions for standard(1110)1-displacement motor

重量 /Weight	21kg	31kg

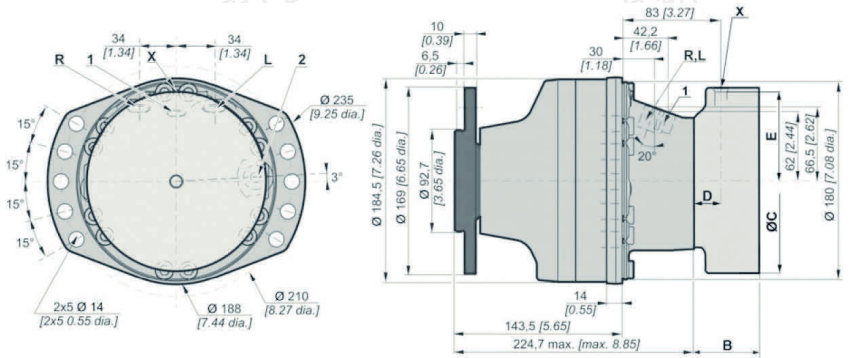

双排量马达（1110）标准尺寸 /Dimensions for standard(1110)2-displacement motor

重量 /Weight	22kg	33kg

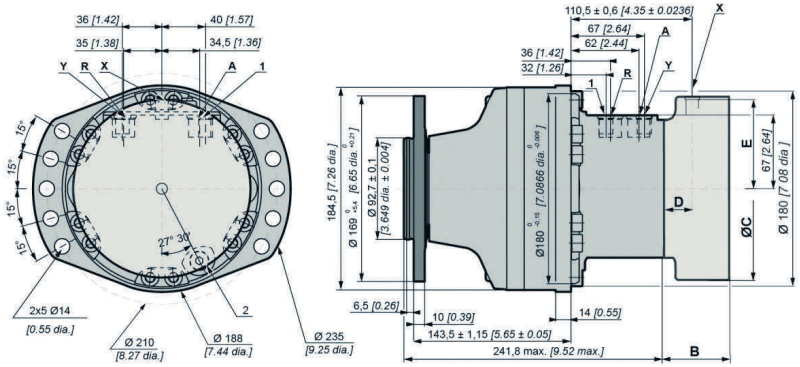

输出轴形式 /Shaft Options

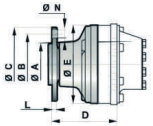

	A	B	C	D	E	N	轮辋安装 Wheel rim mountings	L
1 1 1 0	∅ 92.7	∅ 140	∅ 169	143.4	∅ 179.5	∅ 18	5×M14×1.5	11

螺栓 /Studs

各种螺栓 Various studs	螺栓尺寸 Studs size	P	C min.	C max.	D	等级 CLASS	扭矩 (1)* Torque	扭矩 (2)* Torque
		mm	mm	mm	mm		N.m	N.m
	M14×1.5	45	5	18	16.5	12.9	200	250
		50		23				
		62		33				
							轮胎 /Tire	钢轮 /Drum

(*): 紧固扭矩是针对指定载荷给出的。

The tightening torques are given for the indicated loads.

(1): 轮辋: 轮辋安装紧固扭矩建议值 (>240 N/mm²) 。

Wheel rim:Suggested tightening torque for wheel rim mountings(Re steel disc>240 N/mm²)

(2): 标准: 其它安装方式紧固扭矩建议值 (>360 N/mm²) 。

Standard:Suggested tightening torque in other cases(Re steel flange >360 N/mm²)

负载曲线 /Load Curves

部件的使用寿命受压力的影响，所以必须核实应用到部件上的合力（轴向载荷 / 径向载荷) 应与部件承受荷载的允许值相协调一致，并且这些部件的最终使用寿命应遵守其应用规范。

The service life of the component is affected by pressure, so it must be verified that the combined force applied to the component (axial load/radial load) should be consistent with the allowable value of the load borne by the component, and The final service life of these components should comply with their application specifications.

径向载荷允许值 Permissible radial loads

试验条件 Test conditions:

静态 /Static: 0 r/min 0bar

动态 :0 r/min，标准排量，最大扭矩时无轴向载荷
Dynamic: 0 r/min code 0 displacement,without axial load at max.torque

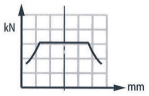

轴承寿命 Service life of bearings

试验条件 Test conditions:

L:150bars(平均压力) 时，百万转 (B10)，采用 25cSt 流体，标准排量，无轴向载荷
L: Millions B10 revolutions at 150 bars(average prssure),with 25cSt fluid,code 0 displacement;without axial load

1 1 1 0

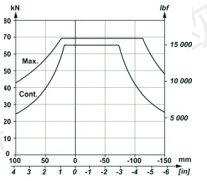

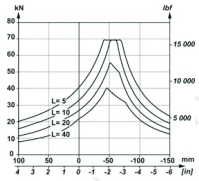

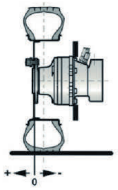

PMS/PMSE02 轴马达 PMS/PMSE02 Shaft Motor

单排量马达（2A50）标准尺寸 /Dimensions for standard(2A50)1-displacement motor

重量 /Weight	21kg	31kg

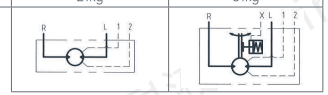

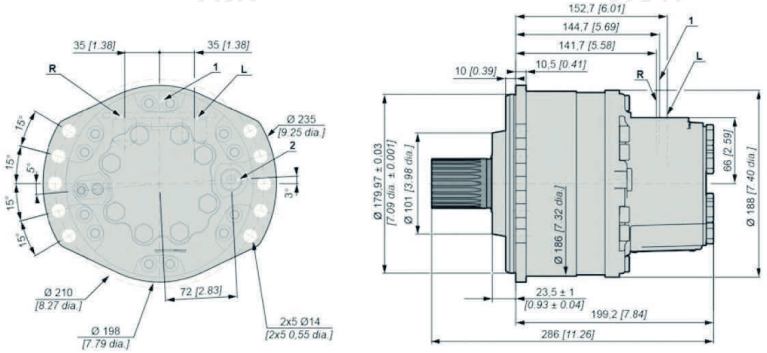

双排量马达 (2A50) 标准尺寸 /Dimensions for standard(2A50)2-displacement motor

重量 /Weight	22kg	33kg

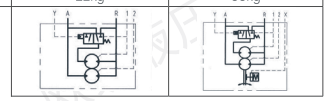

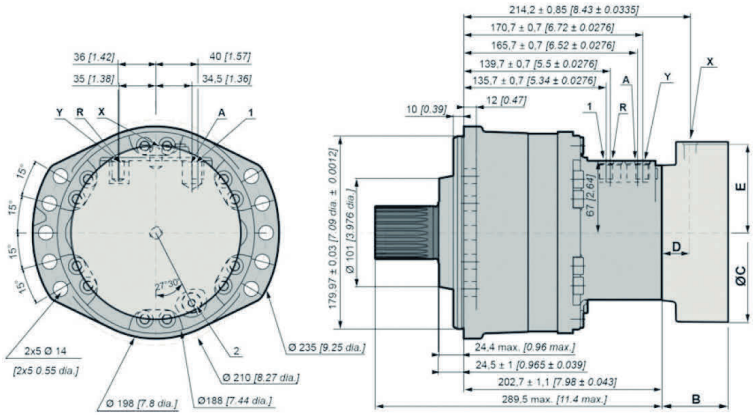

输出轴形式 /Shaft Options

2 A 5 0		A	B	C	D	E	F
DIN 5480 花键 DIN 5480 splines							
公称直径 /Nominal ∅	50						
模数 /Module	2						
Z	24	15	R2.5	23.8	2×M10	22	60

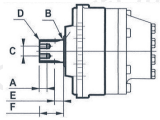

负载曲线 /Load Curves

部件的使用寿命受压力的影响，所以必须核实应用到部件上的合力（轴向载荷 / 径向载荷）应与部件承受荷载的允许值相协调一致，并且这些部件的最终使用寿命应遵守其应用规范。

The service life of the component is affected by pressure, so it must be verified that the combined force applied to the component (axial load/radial load) should be consistent with the allowable value of the load borne by the component, and The final service life of these components should comply with their application specifications.

径向载荷允许值 Permissible radial loads

径向载荷允许值 Permissible radial loads 试验条件 /Test conditions:

静态 /Static: 0 r/min 0bar

动态 :0 r/min，标准排量，最大扭矩时无轴向载荷
Dynamic: 0 r/min code 0 displacement,without axial load a max.torque

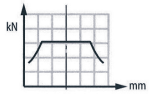

轴承寿命 Service life of bearings

试验条件 Test conditions:

L:150bars（平均压力）时，百万转（B10），采用 25cSt 流体，标准排量，无轴向载荷
L: Millions B10 revolutions at 150 bars(average prssure),with 25cSt fluid, code 0 displacement,without axial load

G
66.45

2 A 5 0

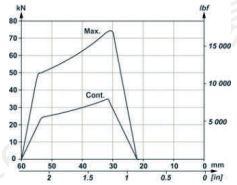

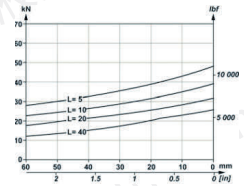

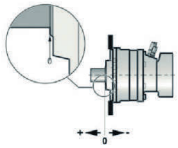

油口形式 /Distributor

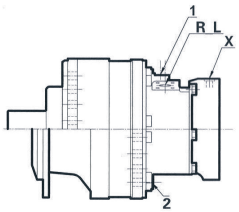

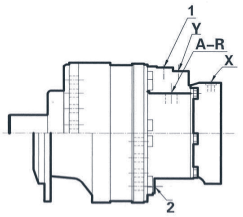

	旧标准 Old standards	标准 Standards	主油口 Power supply	变量油口 Displacement control	壳体泄油口 Case drain	驻车制动控制油口 Control of parking break
			A_RIR_L	Y	1.2	X
A	SAE J514	ISO 11926-1	1"1/16-12 UNF	1/19"-18 UNF	9/16"-18 UNF	9/16"-18 UNF
3	BSPP	ISO 1179-1	∅ 21	∅ 13	∅ 17	∅ 13
		ISO 9974-1				
最高压力 Max.pressure	PS / PSE bar		450 / 400	30	1	30

效率 /Efficiency

总效率 /Overall efficiency

在 50℃时，使用 HV46 液压油标准排量马达工作 100 小时后的平均值

Average values given for guidance for code displacement after 100 hours of operation with HV46 hydraulic fluid at 50℃

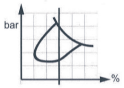

实际输出扭矩 /Actual output torque

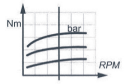

PMS02

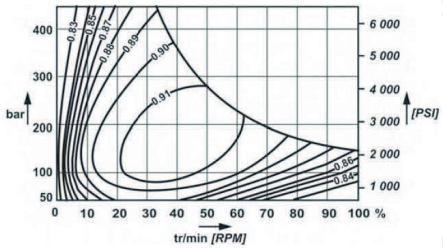

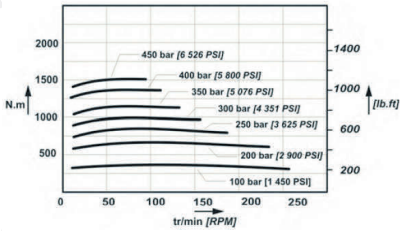

PMSE02

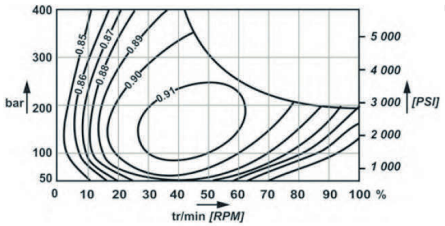

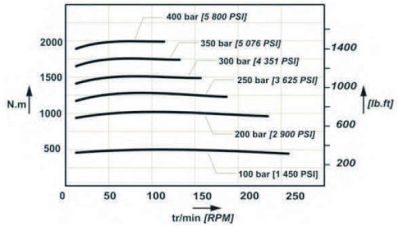

驻动制动器 /Brakes

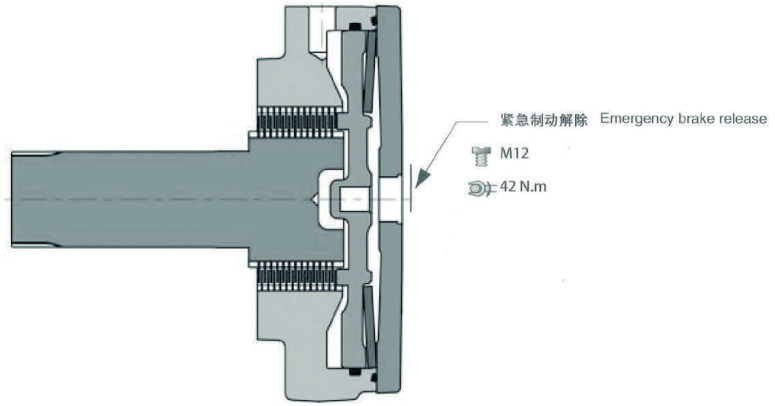

制动器原理 /Brake principle

在失压状态下多片式制动器起作用。弹簧对制动片产生作用力，该力使制动片抱紧转轴，制动扭矩与释放压力成正比。

This is a multidisc brake which is activated by a lack of pressure. The spring exerts a force on the piston ,which presses on the fixed and mobile discs,and immobilizes the shaft.The braking torque decreases in linear proportion to the brake release pressure.

	F 0 3
制动腔内压为为 0 时制动器的制动扭矩（新制动器）Parking brake torque at 0 bars on housing (new brake)	1400 Nm
制动腔内压力为 0 时紧急制动扭矩（最多可作紧急制动使用 10 次）Dynamic emergency braking torque at 0 bars on housing(max.10 uses of emergency brakes	910 Nm
制动腔内压力为 0 时剩余的驻车制动扭矩 * Residual parking braking at 0 bars on housing*	1050 Nm
最小的制动器释放压力 Min.brake release pressure	15 bar
油量 Oil capacity	100 ml
用于制动器释放液压油量 Volume for brake release	16 ml

* 作为紧急制动使用后 After emergency brake has been used

(!) 制动时不要运转马达。Do not run in multidisc brakes.

(!) 每当驻车制动器作为辅助性制动（或紧急制动器）使用时，都要对驻车制动器进行功能上的检查。

A functional check of the parking brake must be carried out each time it is used as an auxiliary brake (or emergency brake).

PMS/PMSE05
技术参数表 /Technical Parameter

A、全排量 First displacement B、半排量 Second displacement

产品型号 Type	排量代号 Displacement Code	A	B	理论扭矩 Theoretical Torque	最大功率 Max.Power			最大转速 Max.Speed	最高压力 Max.Pressure
				A	A	B 优先旋向 /Preferred	B 非优先旋向 / Non-Preferred	B	
		ml/r	ml/r	100bar N.m	KW	KW	KW	r/min	bar
PMS05	6	260	130	413	29	19	15	265	450
	8	376	188	598				250	
	0	468	234	744				240	
	1	515	257	817				220	
	2	560	280	890				200	
PMSE05	8	503	252	843	29	19	15	200	
	0	625	313	994				190	400
	1	688	344	1094				175	
	2	750	375	1193				160	
	3	820	410	1304				145	

产品标识说明 /Ordering Code

*****_ * _*** _*** _**** _****

1 2 3 4 5 6 7 * * * 0 8

1、马达型号 Moter type
PMS/PMSE05

2、排量代号 Displacement Code
PMS05:6，8，0，1，2
PMSE05:8，0，1，2，3

3、配流体形式 Valving type

单排量配流体	1
对称型配流体	A 排量比 2
	B 排量比 <2
	C 排量比 >2
双排量和配流体（顺时针方向）	D 排量比 2
	E 排量比 <2
	F 排量比 >2
双排量和配流体（逆时针方向）	G 排量比 2
	H 排量比 <2
	J 排量比 >2

4、安装法兰形式 Mounting options

不带安装法兰 Without mounting	1	4
带安装法兰 With mounting	2	-
蹄形安装法兰 Horseshoe fixing	3	6
1- 单排量 /1-Displacement 2- 双排量 /2-Displacement		热交换阀 Exchange

5、油口形式 Distributor
3——ISO 1179-1 连接 /ISO 1179-1 connection
4——ISO 9974-1 连接 /ISO 9974-1 connection

6、制动器 Brake
A05——无制动器（普通端盖）/Without brake(simple plate)
F06——带制动器 /With brake
R05——无制动器（加强端盖）/Without brake(reinforced plate)

7、输出轴形式 Shaft options
0- 无轴承支撑 Without bearing support
1- 无安装法兰 /Without mounting
2- 带安装法兰 /Lug mounting

8、附加项 Additional items

0	无选项 With Options or Adaptations
1	氟化橡胶密封 Fluorinated elastomer seals
3	不带机械解除制动的端盖 Brake environmental cover without plug
5	泄油口（配流系统附加泄漏油口）Drainage(additional drain on valving systems)
6	工业轴承支撑 Industrial bearing support
8	预留速度传感器位置 Predisposition for speed sensor
A	空心轴 Hollow shaft
B	轴承支撑上带泄油口 Drain on the bearing support
C	恶劣工况 Abrasive environment
D	特殊喷漆或无喷漆 Special paint or no paint
E	加强轴封 Reinforced sealing
G	特殊轮圈安装 Special wheel rim mounting
H	高效率 High efficiency
J	加强轴肩 Reinforced bearing stop
K	加强轴 Reinforced shaft
M	高速 Hight speed

0- 无鼓式制动器 /Without drum brakes

1- 无螺栓 /Without studs
2- 螺栓螺母 /With studs+nuts
3- 螺栓 /With studs
4- M 螺纹孔 ./M threaded holes

伸出轴 /Male shaft
5- 伸出轴 DIN5480 花键
Male shaft din5480 splines

0- 无伸出轴 /Without shaft
2- 10×18，∅ 140
A- 伸出轴承支撑
For male shaft bearing support

欧易液压 intermot

PMS/PMSE
PMS/PMSE02
PMS/PMSE05
PMS/PMSE08
PMS/PMSE11
PMS/PMSE18
PMS35
PMS50
PMS83
PMS125

PMS/PMSE05 轮边马达 PMS/PMSE05 Wheel Motor

单排量马达（1210）标准尺寸 /Dimensions for standard(1210)1-displacement motor

重量 /Weight	40kg	50kg
	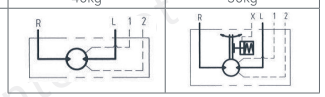	

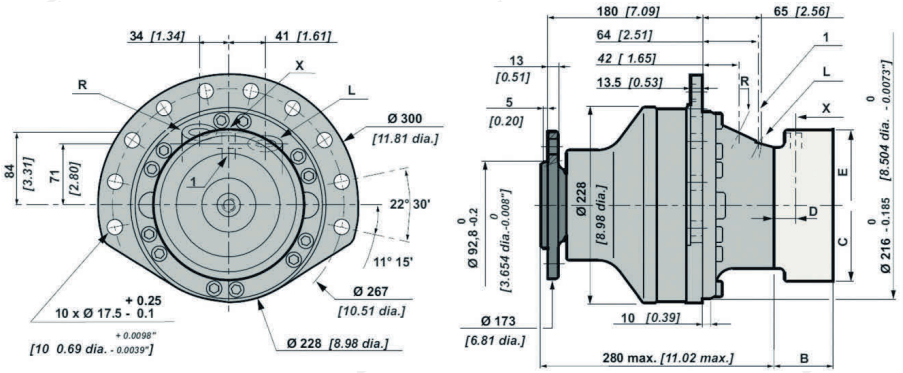

双排量马达（1210）标准尺寸 /Dimensions for standard(1210)2-displacement motor

重量 /Weight	41kg	52kg
	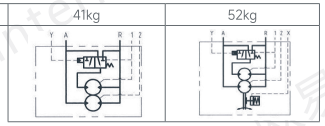	

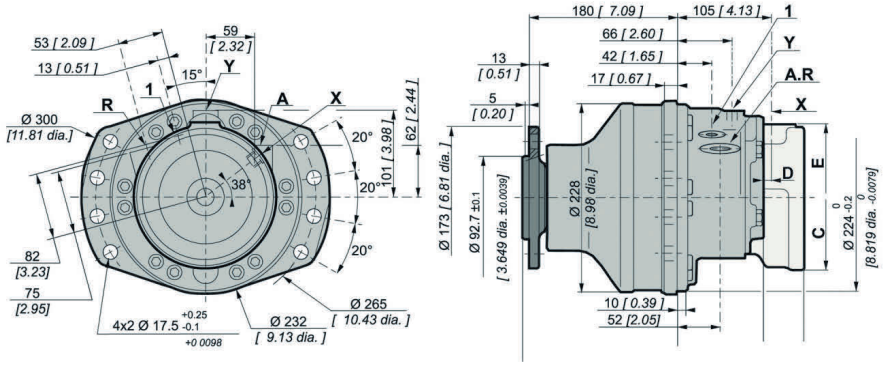

输出轴形式 /Shaft Options

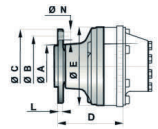

	A	B	C	D	E	N	轮辋安装 Wheel rim mountings	L
1 2 1 0	∅ 92.7	∅ 140	∅ 170	178.6	∅ 228	∅ 18	10xM14x1.5	11

螺栓 /Studs

各种螺栓 Various studs	螺栓尺寸 Studs size	P	C min.	C max.	D	等级 CLASS	扭矩 (1)* Torque	扭矩 (2)* Torque
		mm	mm	mm	mm		N.m	N.m
	M14×1.5	45	5	18	16.5	12.9	200	250
		50		23				
		62		33				
							轮胎 /Tire	钢轮 /Drum

（ * ）：紧固扭矩是针对指定载荷给出的。

The tightening torques are given for the indicated loads.

（ 1 ）：轮辋：轮辋安装紧固扭矩建议值（>240 N/mm²）。

Wheel rim:Suggested tightening torque for wheel rim mountings(Re steel disc>240 Nmm)

（ 2 ）：标准：其它安装方式紧固扭矩建议值 (>360-N/mm²)

Standard:Suggested tightening torque in other cases(Re steel flange >360 N/mm²)

负载曲线 /Load Curves

部件的使用寿命受压力的影响，所以必须核实应用到部件上的合力（轴向载荷 / 径向载荷）应与部件承受载荷的允许值相协调一致，并且这些部件的最终使用寿命应遵守其应用规范。

The service life of the components is influenced by the pressure. You must check that the combination of forces applied(Axial load/ Radial load) is compatible with the permissible loads for the components,and that the resulting service lives of these components complies with the application's specifications.

径向载荷允许值 Permissible radial loads

试验条件 /Test conditions:
静态 /Static: 0 r/min 0bar
动态 :0 r/min，标准排量，最大扭矩时无轴向载荷 Dynamic: 0 r/min code 0 displacement,without axial load at max.torque

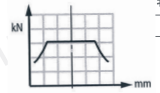

轴承寿命 Service life of bearings

试验条件 Test conditions:
L:150bars（平均压力）时，百万转（B10），采用 25cSt 流体，标准排量，无轴向载荷 L: Millions B10 revolutions at 150 bars(average prssure),with 25cSt fluid, code 0 displacement,without axial load

1 2 1 0

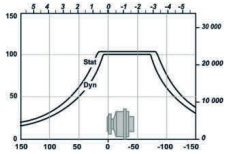

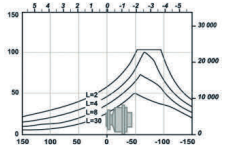

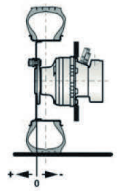

PMS/PMSE05 轴马达 PMS/PMSE05 Shaft Motor

单排量马达（2A50）标准尺寸 /Dimensions for standard(2A50)1-displacement motor

重量 /Weight	41kg	47kg

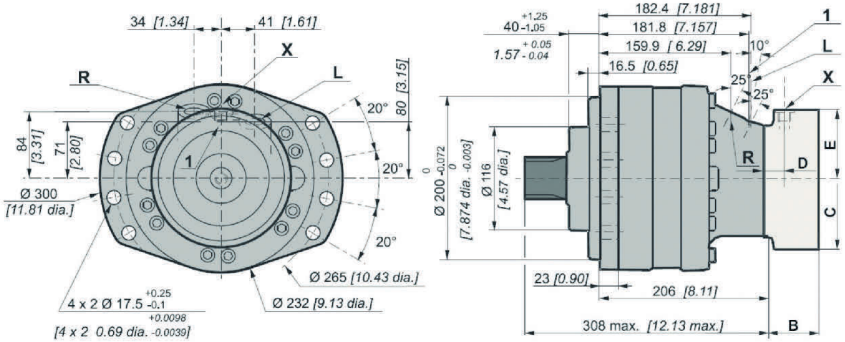

双排量马达（2A50）标准尺寸 /Dimensions for standard(2A50)2-displacement motor

重量 /Weight	45kg	55kg

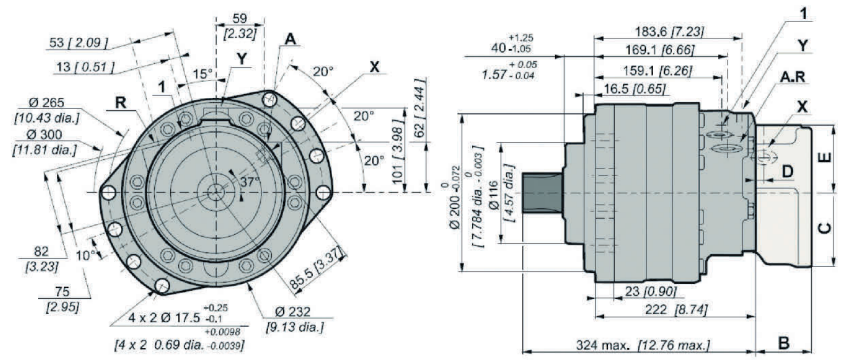

输出轴形式 /Shaft Options

2 A 5 0		A	B	C	D	E	F
DIN 5480 花键 DIN 5480 splines							
公称直径 /Nominal Ø	50						
模数 /Module	3						
Z	17	15	R2.3	23.8	2×M10	23	60

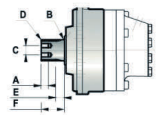

负载曲线 /Load Curves

部件的使用寿命受压力的影响，所以必须核实应用到部件上的合力（轴向载荷 / 径向载荷）应与部件承受载荷的允许值相协调一致，并且这些部件的最终使用寿命应遵守其应用规范。

The service life of the components is influenced by the pressure. You must check that the combination of forces applied(Axial load/ Radial load) is compatible with the permissible loads for the components,and that the resulting service lives of these components complies with the application's specifications.

径向载荷允许值 Permissible radial loads

试验条件 /Test conditions:

静态 /Static: 0 r/min 0bar

动态 :0 r/min，标准排量，最大扭矩时无轴向载荷
Dynamic: o r/min code 0 displacement,without axial load at max.torque

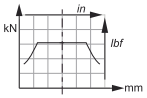

轴承寿命 Service life of bearings

试验条件 /Test conditions:

L:150bars（平均压力）时，百万转（B10），采用 25cSt 流体，标准排量，无轴向载荷
L:Millions B10 revolutions at 150 bars(average prssure),with 25cSt fluid,code 0 displacement,without axial load

G
81.75

2	A	5	0

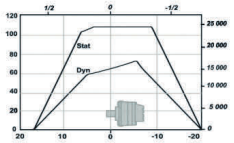

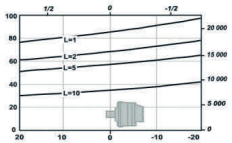

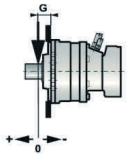

油口形式 /Distributor

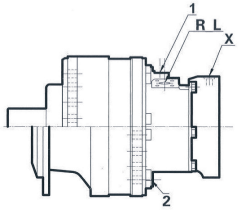

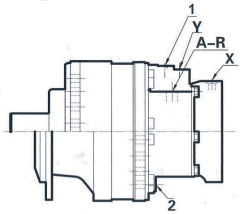

	旧标准 Old standards	标准 Standards	主油口 Power supply	变量油口 Displacement control	壳体泄油口 Case drain	驻车制动控制油口 Control of parking break
			A_RIR_L	Y	1.2	X
A	BSPP	ISO 1179-1	Ø 27	Ø 13	Ø 17	Ø 13
3	DIN3852	ISO 9974-1	M27×2	M14×1.5	M16×1.5	M14×1.5
最高压力 Max.pressure	PS / PSE	bar	450 / 400	30	1	30

效率 /Efficiency

总效率 /Overall efficiency

在 50℃时，使用 HV46 液压油标准排量马达工作 100 小时后的平均值

Average values given for guidance for code 0displacement after 100 hours of operation withHV46 hydraulic fluid at 50℃

实际输出扭矩 /Actual output torque

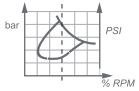

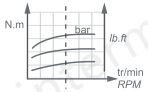

PMS05

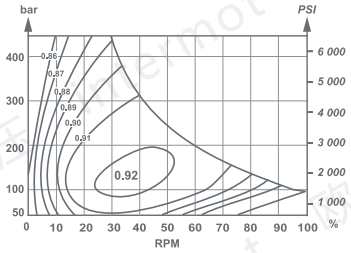

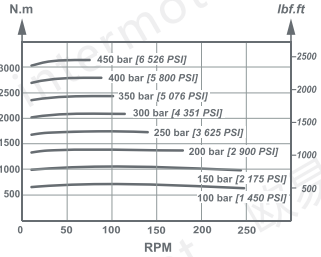

PMSE05

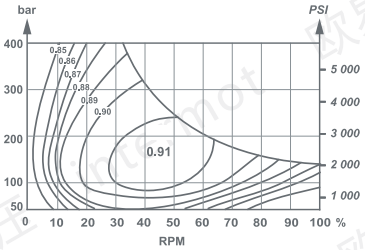

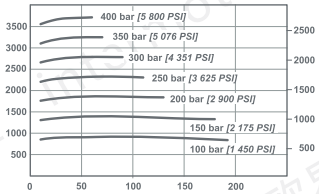

驻动制动器 /Brakes

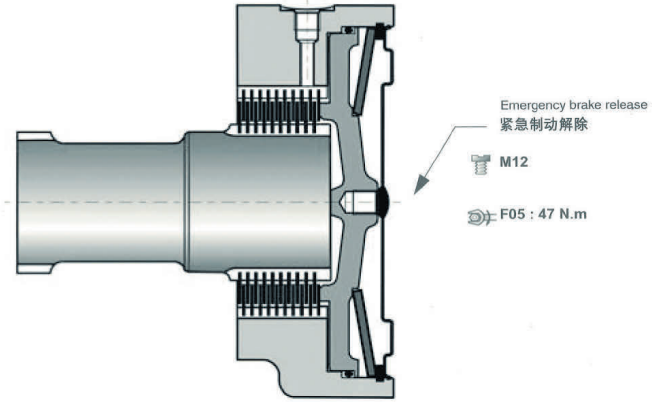

制动器原理 /Brake principle

在失压状态下多片式制动器起作用。弹簧对制动片产生作用力，该力使制动片抱紧转轴，制动扭矩与释放压力成正比。

This is a multidisc brake which is activated by a lack of pressure. The spring exerts a force on the piston ,which presses on the fixed and mobile discs,and immobilizes the shaft.The braking torque decreases in linear proportion to the brake release pressure.

	F 0 6
制动腔内压为为 0 时制动器的制动扭矩（新制动器）Parking brake torque at 0 bars on housing (new brake)	3060 N.m
制动腔内压力为 0 时紧急制动扭矩 (最多可作紧急制动使用 10 次) Dynamic emergency braking torque at 0 bars on housing(max.10 uses of emergency brakes)	1990 N.m
制动腔内压力为 0 时剩余的驻车制动扭矩 * Residual parking braking at 0 bars on housing*	2295 N.m
最小的制动器释放压力 Min.brake release pressure	15 bar
油量 Oil capacity	70 ml
用于制动器释放液压油量 Volume for brake release	32 ml

* 作为紧急制动使用后 After emergency brake has been used

(!) 制动时不要运转马达。Do not run in multidisc brakes.

(!) 每当驻车制动器作为辅助性制动（或紧急制动器）使用时，都要对驻车制动器进行功能上的检查。
A functional check of the parking brake must be carried out each time it is used as an auxiliary brake (or emergency brake).

PMS/PMSE08
技术参数表 /Technical Parameter

A: 全排量 First displacement B: 半排量 Second displacement

产品型号 Type	排量代号 Displacement Code	A	B	理论扭矩 Theoretical Torque	最大功率 Max.Power			最大转速 Max.Speed	最高压力 Max.Pressure
				A	A	B 优先旋向Preferred	B 非优先旋向 /Non-Preferred	B	
		ml/r	ml/r	100bar N.m	kW	kW	kW	r/min	bar
PMS08	6	467	234	743	41	27	21	210	450
	8	627	314	997				210	
	9	702	351	1116				185	
	0	780	390	1240				170	
	1	857	429	1363				155	
	2	934	467	1485				140	
PMSE08	0	1043	522	1658	41	27	21	130	400
	1	1146	573	1822				110	
	2	1248	624	1984				105	

产品标识说明 /Ordering Code

*****_ * _*** _*** _**** _****

1 | 2 | 3 4 5 | 6 | 7 | 8

1、马达型号 Moter type
PMS/PMSE08

2、排量代号 Displacement Code
PMS08: 6, 8, 9, 0, 1, 2
PMSE08:0, 1, 2

3、配流体形式 Valving type

单排量配流体	1
对称型配流体	A 排量比 2
	B 排量比 <2
	C 排量比 >2
双排量和配流体（顺时针方向）	D 排量比 2
	E 排量比 <2
	F 排量比 >2
双排量和配流体（逆时针方向）	G 排量比 2
	H 排量比 <2
	J 排量比 >2

4、安装法兰形式 Mounting options

不带安装法兰 Without mounting	1	4
带安装法兰 With mounting	2	5
带安装法兰 With mounting		热交换阀 Exchange

5、油口形式 Distributor

1	ISO 6162 法兰 /Flange
	ISO 9974-1 连接 /Connection
5	ISO 9974-1 连接 /Connection(M27×2)

6、制动器 Brake
A08——无制动器（普通端盖）/Without brake(simple plate)
F09——带制动器 /With brake
R08——无制动器（加强端盖）/Without brake(reinforced plate)

7、输出轴形式 Shaft options
0- 无轴承支撑 /Without bearing support
1- 无安装法兰 /Without mounting
2- 带安装法兰 /Lug mounting

8、附加项 Additional items

0	无选项 With Options or Adaptations
1	氟化橡胶密封 Fluorinated elastomer seals
2	有连接件的速度传感器 Speed sensor with connector
3	不带机械解除制动的端盖 Brake environmental cover without plug
5	泄油口（配流系统附加泄漏油口） Drainage(additional drain on valving systems)
6	工业轴承支撑 Industrial bearing support
8	预留速度传感器位置 Predisposition for speed sensor
A	空心轴 Hollow shaft
B	轴承支撑上带泄油口 Drain on the bearing support
C	恶劣工况 Abrasive environment
D	特殊喷漆或无喷漆 Special paint or no paint
E	加强轴封 Reinforced sealing
G	特殊轮圈安装 Special wheel rim mounting
J	加强轴肩 Reinforced bearing stop
K	加强轴 Reinforced shaft
M	高速 Hight speed

0- 无鼓式制动器 /Without drum brakes

1- 无螺栓 /Without studs
2- 螺栓螺母 /With studs+nuts
3- 螺栓 /With studs
4-M 螺纹孔 /M threaded holes

伸出轴 /Male shaft

5- 伸出轴 DIN5480 花键
Male shaft din5480 splines

0- 无伸出轴 /Without shaft
1-6x ∅20, ∅205
2-8x ∅22, ∅203.2
3-6x ∅20, ∅205
4-10x ∅18, ∅225
A- 伸出轴承支撑
For male shaft bearing support

PMS/PMSE08 轮边马达 PMS/PMSE08 Wheel Motor

单排量马达（1110）标准尺寸 /Dimensions for standard(1110)1-displacement motor

重量 /Weight	60kg	79kg

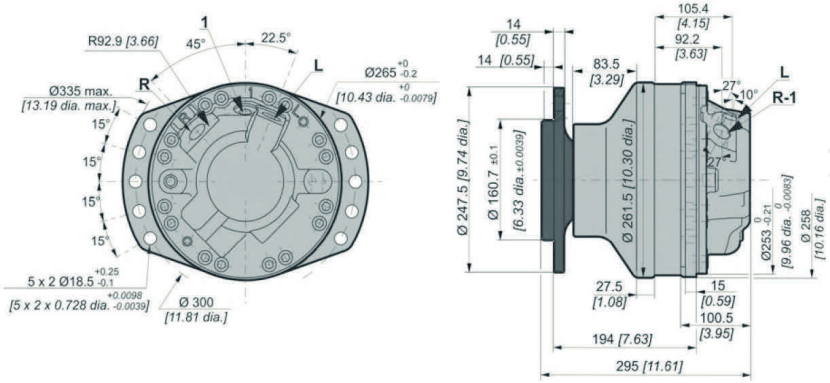

双排量马达（1110）标准尺寸 /Dimensions for standard(1110)2-displacement motor

重量 /Weight	65kg	84kg

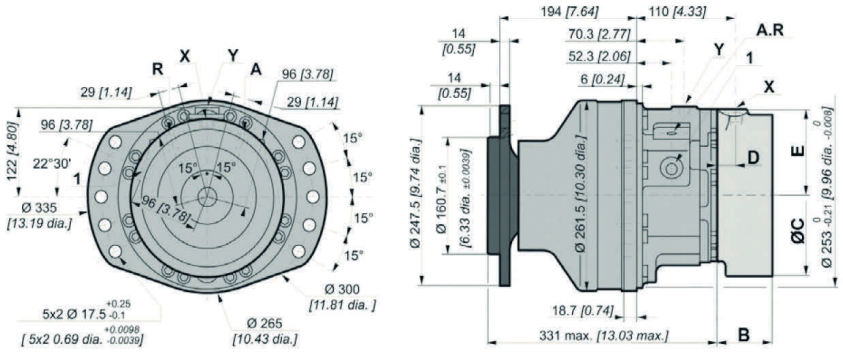

PMS/PMSE
PMS/PMSE02
PMS/PMSE05
PMS/PMSE08
PMS/PMSE11
PMS/PMSE18
PMS35
PMS50
PMS83
PMS125

输出轴形式 /Shaft Options

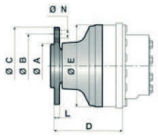

	A	B	C	D	E	N	轮辋安装 Wheel rim mountings	L
1 1 1 0	Ø 160.7	Ø 205	0245	195	Ø 261.5	6× Ø 20	M18×1.5	13.5

螺栓 /Studs

各种螺栓 Various studs	螺栓尺寸 Studs size	P	C min.	C max.	D	等级 CLASS	扭矩 (1)* Torque	扭矩 (2)* Torque
		mm	mm	mm	mm		N.m	N.m
	M18x1.5	55	5	18	23	12.9	420	550
		60		23				
							轮胎 /Tire	钢轮 /Drum

（ * ）：紧固扭矩是针对指定载荷给出的。

The tightening torques are given for the indicated loads.

（ 1 ）：轮辋：轮辋安装紧固扭矩建议值 (>240 N/mm²)。

Wheel rim:Suggested tightening torque for wheel rim mountings(Re steel disc>240 N/mm²)

（ 2 ）：标准：其它安装方式紧固扭矩建议值（>360 N/mm²）.

Standard:Suggested tightening torque in other cases(Re steel flange >360 N/mm²)

负载曲线 /Load Curves

部件的使用寿命受压力的影响，所以必须核实应用到部件上的合力（轴向载荷 / 径向载荷）应与部件承受载荷的允许值相协调一致，并且这些部件的最终使用寿命应遵守其应用规范。

The service life of the components is influenced by the pressure. You must check that the combination of forces applied(Axial load/ Radial load) is compatible with the permissible loads for the components,and that the resulting service lives of these components complies with the application's specifications.

径向载荷允许值 Permissible radial loads

试验条件 Test conditions:
静态 /Static: 0 r/min 0bar
动态 :0 r/min，标准排量，最大扭矩时无轴向载荷 Dynamic: 0 r/min code 0 displacement,without axial load at max.torque

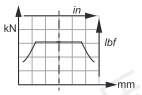

轴承寿命 Service life of bearings

试验条件 Test conditions:
L:150bars（平均压力）时，百万转（B10），采用 25cSt 流体，标准排量，无轴向载荷 L:Millions B10 revolutions at 150 bars(average prssure),with 25cSt fluid,code 0 displacement,without axial load

1 1 1 0

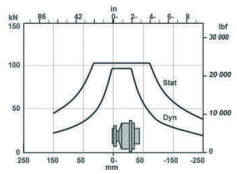

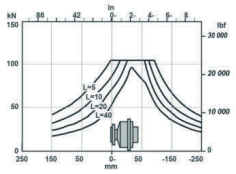

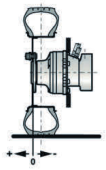

PMS/PMSE08 轴马达 PMS/PMSE08 Shaft Motor

单排量马达（2A50）标准尺寸 /Dimensions for standard(2A50)1-displacement motor

重量 /Weight	62kg	80kg
	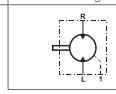	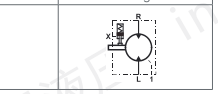

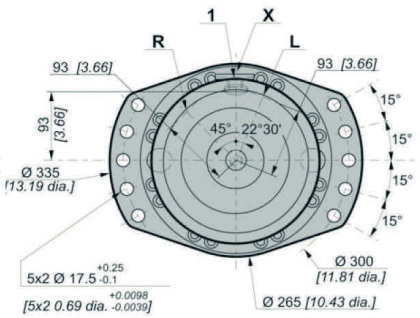

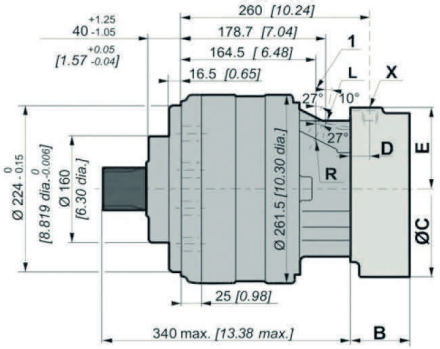

双排量马达（2A50）标准尺寸 /Dimensions for standard(2A50)2-displacement motor

重量 /Weight	67kg	85kg
	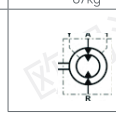	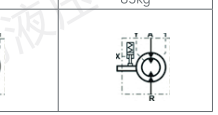

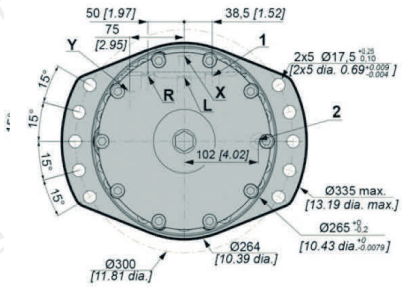

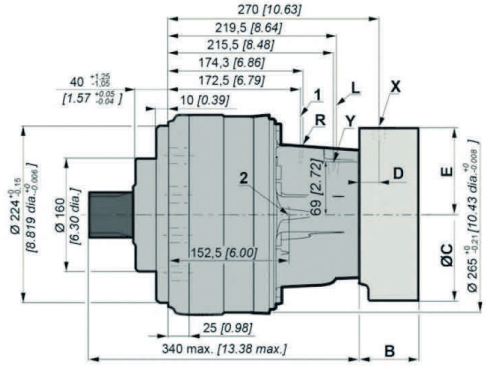

输出轴形式 /Shaft Options

2 A 5 0		A	B	C	D	E	F
DIN 5480 花键 DIN 5480 splines							
公称直径 /Nominal ∅	70	15	R2.5	35	2×M10	23	70
模数 /Module	3						
Z	22						

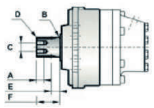

2 A 4 0		A	B	C	D	E	F
DIN 6885 平键 DIN 6885 splines							
X 20		30	R2.5	∅ 69.99	M16	90	106
Y 74	max.						

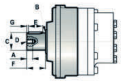

负载曲线 /Load Curves

部件的使用寿命受压力的影响，所以必须核实应用到部件上的合力（轴向载荷 / 径向载荷）应与部件承受载荷的允许值相协调一致，并且这些部件的最终使用寿命应遵守其应用规范。

The service life of the components is influenced by the pressure. You must check that the combination of forces applied(Axial load/ Radial load) is compatible with the permissible loads for the components,and that the resulting service lives of these components complies with the application's specifications.

径向载荷允许值 Permissible radial loads

试验条件 Test conditions:

静态 /Static: 0 r/min 0bar

动态 :0 r/min，标准排量，最大扭矩时无轴向载荷
Dynamic: 0 r/min code 0 displacement,without axial load at max.torque

轴承寿命 Service life of bearings

试验条件 Test conditions:

L:150bars（平均压力）时，百万转（B10），采用 25cSt 流体，标准排量，无轴向载荷
L: Millions B10 revolutions at 150 bars(average prssure),with 25cSt fluid，code 0 displacement,without axial load

G
86.75
2 A 5 0

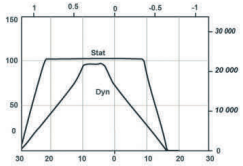

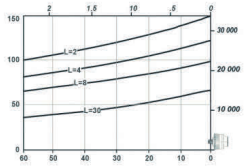

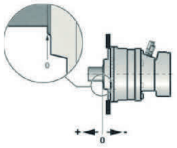

G
87.25
2 A 4 0

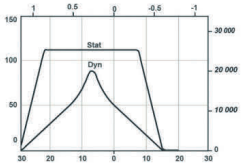

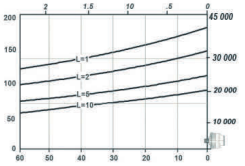

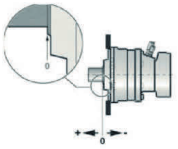

油口形式 /Distributor

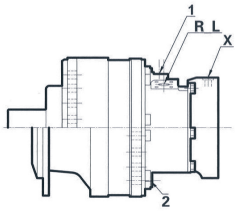

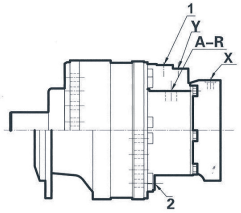

	旧标准 Old standards	标准 Standards	主油口 Power supply	变量油口 Displacement control	壳体泄油口 Case drain	驻车制动控制油口 Control of parking break
			A_RIR_L	Y	1.2	X
1	ISO 6162	ISO 6162	DN13 PN400	M14×1.5	M18×1.5	M16×1.5
	DIN 3852	ISO 9974-1				
5	DIN 3852	ISO 9974-1	M27x2	M14×1.5	M18×1.5	M16×1.5
最高压力 Max.pressure	MS	bar	450	30	1	30
	MSE		400			

效率 /Efficiency

总效率 /Overall efficiency

在 50℃时，使用 HV46 液压油标准排量马达工作 100 小时后的平均值

Average values given for guidance for code 0 displacement after 100 hours of operation withHV46 hydraulic fluid at 50℃

实际输出扭矩 /Actual output torque

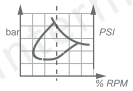

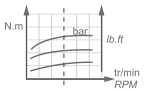

PMS08

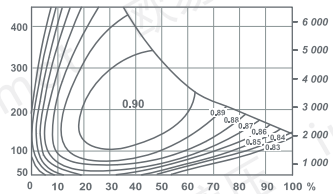

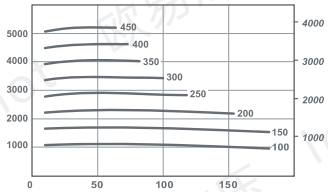

PMSE08

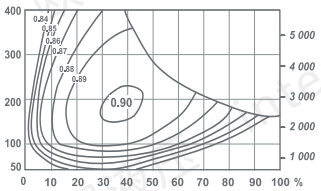

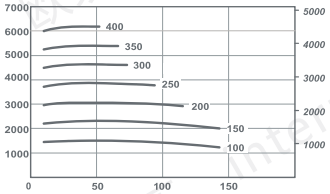

驻动制动器 /Brakes

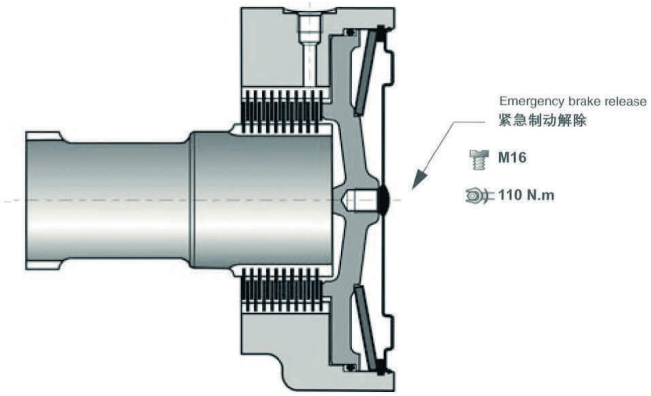

制动器原理 /Brake principle

在失压状态下多片式制动器起作用。弹簧对制动片产生作用力，该力使制动片抱紧转轴，制动扭矩与释放压力成正比。

This is a multidisc brake which is activated by a lack of pressure. The spring exerts a force on the piston ,which presses on the fixed and mobile discs,and immobilizes the shaft.The braking torque decreases in linear proportion to the brake release pressure.

	F 0 9
制动腔内压力为 0 时制动器的制动扭矩（新制动器） Parking brake torque at 0 bars on housing (new brake)	5620 Nm
制动腔内压力为 0 时紧急制动扭矩（最多可作紧急制动使用 10 次） Dynamic emergency braking torque at 0 bars on housing(max.10 uses of emergency brakes	3653 Nm
制动腔内压力为 0 时剩余的驻车制动扭矩 * Residual parking braking at 0 bars on housing	4215 Nm
最小的制动器释放压力 Min.brake release pressure	15 bar
油量 Oil capacity	100 ml
用于制动器释放液压油量 Volume for brake release	40 ml

* 作为紧急制动使用后 After emergency brake has been used

① 制动时不要运转马达。Do not run in multidisc brakes. ①

① 每当驻车制动器作为辅助性制动（或紧急制动器）使用时，都要对驻车制动器进行功能上的检查。
A functional check of the parking brake must be carried out each time it is used as an auxiliary brake (or emergency brake).

PMS/PMSE11
技术参数表 /Technical Parameter

A：全排量 First displacement B：半排量 Second displacement

产品型号 Type	排量代号 Displacement Code	A	B	理论扭矩 Theoretical Torque	最大功率 Max.Power			最大转速 Max.Speed		最高压力 Max.Pressure
				A	A	B 优先旋向Preferred	B 非优先旋向 /Non-Preferred	B		
		ml/r	ml/r	100bar N.m	kW	kW	kW	r/min		bar
PMS11	7	730	365	1161	50	33	25	200		450
	8	837	419	1331				195		
	9	943	472	1499				190		
	0	1048	524	1666				185		
	1	1147	574	1824				180		
	2	1250	632	2002				170	175	
PMSE11	9	1263	630	2008	50	33	25	170	190	400
	0	1404	702	2232				155	185	
	1	1536	768	2442				140	180	
	2	1687	844	2682				130	165	

产品标识说明 /Ordering Code

*****_ * _*** _*** _**** _****

1 | 2 | 3 4 5 | 6 | 7 * * * 0 | 8

1、马达型号 Moter type
PMS/PMSE11

2、排量代号 Displacement Code
PMS11:7, 8, 9, 0, 1, 2
PMSE11: 9, 0, 1, 2

3、配流体形式 Valving type

单排量配流体		1
对称型配流体	A 排量比 2	
	B 排量比 <2	
	C 排量比 >2	
双排量和配流体（顺时针方向）	D 排量比 2	
	E 排量比 <2	
	F 排量比 >2	
双排量和配流体（逆时针方向）	G 排量比 2	
	H 排量比 <2	
	J 排量比 >2	

4、安装法兰形式 Mounting options

不带安装法兰 Without mounting	1	4
带安装法兰 With mounting	2	5
1- 单排量 /1-Displacement 2- 双排 /2-Displacement		热交换阀 Exchange

5、油口形式 Distributor

0	无配流体端盖 /No transmission cover
1	ISO 6162 法兰 /ISO 6162 Flange
	ISO 9974-1 连接 /ISO 9974-1 Connection
4	ISO 9974-1 连接 /ISO 9974-1 Connection
A	ISO 11926-1 连接 /ISO 11926-1 Connection

6、制动器 Brake
A11——无制动器（普通端盖）/Without brake(simple plate)
F12——带制动器 /With brake
R11——无制动器（加强端盖）/Without brake(reinforced plate)

7、输出轴形式 Shaft options
0- 无轴承支撑 /Without bearing support
1- 无安装法兰 /Without mounting
2- 带安装法兰 /Lug mounting

8、附加项 Additional items

0	无选项 With Options or Adaptations
1	氟化橡胶密封 Fluorinated elastomer seals
3	不带机械解除制动的端盖 Brake environmental cover without plug
5	泄油口（配流系统附加泄漏油口） Drainage(additional drain on valving systems)
6	工业轴承支撑 Industrial bearing support
8	预留速度传感器位置 Predisposition for speed sensor
A	空心轴 Hollow shaft
B	轴承支撑上带泄油口 Drain on the bearing support
C	恶劣工况 Abrasive environment
D	特殊喷漆或无喷漆 Special paint or no paint
E	加强轴封 Reinforced sealing
G	特殊轮辋安装 Special wheel rim mounting
J	加强轴肩 Reinforced bearing stop
K	加强轴 Reinforced shaft
M	高速 Hight speed

0- 无鼓式制动器 /Without drum brakes

1- 无螺栓 /Without studs
2- 螺栓螺母 /With studs+nuts
3- 螺栓 /With studs
4-M 螺纹孔 /M threaded holes

伸出轴 /Male shaft
5- 伸出轴 DIN5480 花键
Male shaft din5480 splines

0- 无伸出轴 /Without shaft
1-5x ∅ 24，∅ 225
2-10x ∅ 22，∅ 225
3-12x ∅ 20，∅ 205
A- 伸出轴承支撑
For male shaft bearing support

欧易液压 intermot

PMS/PMSE11 轮边马达 PMS/PMSE11 Wheel Motor

单排量马达（1110）标准尺寸 /Dimensions for standard(1110)1-displacement motor

	F12
B	92.5
C	∅ 273.6
D	25

重量 /Weight	86kg	112kg

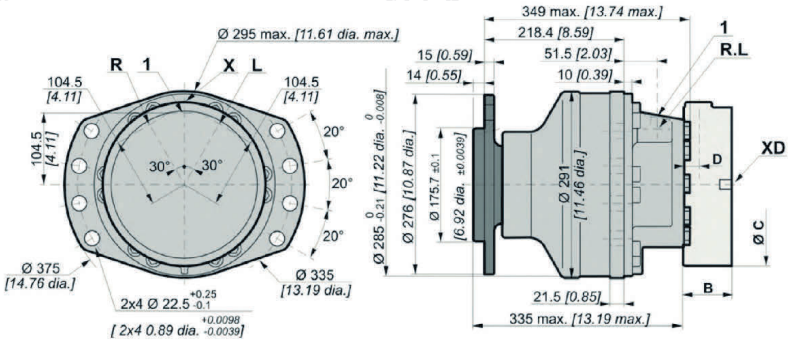

双排量马达（1110）标准尺寸 /Dimensions for standard(1110)2-displacement motor

	F12
B	92.5
C	∅ 273.6
D	25

重量 /Weight	90kg	116kg

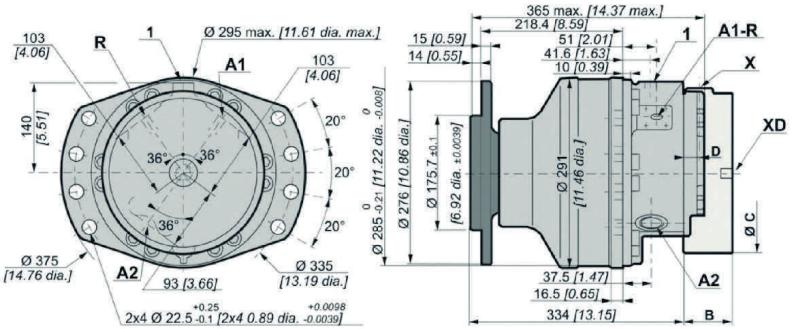

输出轴形式 /Shaft Options

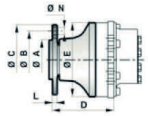

	A	B	C	D	E	N	轮辋安装 Wheel rim mountings	L
1 1 1 0	∅ 175.7	∅ 225	∅ 276	218.6	∅ 291	∅ 24	5×M22×1.5	14

螺栓 /Studs

各种螺栓 Various studs	螺栓尺寸 Studs size	P	C min.	C max.	D	等级 CLASS	扭矩 (1)* Torque	扭矩 (2)* Torque
		mm	mm	mm	mm		N.m	N.m
	M22×1.5	65	5	24	26	12.9	695	1050
							轮胎 /Tire	钢轮 /Drum

（ * ）：紧固扭矩是针对指定载荷给出的。

The tightening torques are given for the indicated loads.

（ 1 ）：轮辋：轮辋安装紧固扭矩建议值（>240 N/mm²）。

Wheel rim:Suggested tightening torque for wheel rim mountings(Re steel disc>240 Nmm²)。

（ 2 ）：标准：其它安装方式紧固扭矩建议值 (>360 N/mm²)。

Standard:Suggested tightening torque in other cases(Re steel flange >360 N/mm²)。

负载曲线 Load Curves

部件的使用寿命受压力的影响，所以必须核实应用到部件上的合力（轴向载荷 / 径向载荷）应与部件承受载荷的允许值相协调一致，并且这些部件的最终使用寿命应遵守其应用规范。

The service life of the components is influenced by the pressure. You must check that the combination of forces applied(Axial load/ Radial load) is compatible with the permissible loads for the components,and that the resulting service lives of these components complies with the application's specifications.

径向载荷允许值 Permissible radial loads

试验条件 Test conditions:

静态 /Static: 0 r/min 0bar

动态 :0 r/min，标准排量，最大扭矩时无轴向载荷
Dynamic: 0 r/min code 0 displacement,without axial load at max.torque

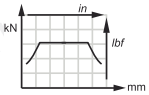

轴承寿命 Service life of bearings

试验条件 Test conditions:

L: 150bars（平均压力）时，百万转（B10），采用 25cSt 流体，标准排量，无轴向载荷
L: Millions B10 revolutions at 150 bars(average prssure),with 25cSt fluid,code 0 displacement,without axial load

1	1	1	0

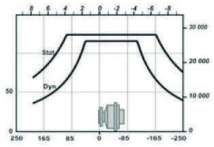

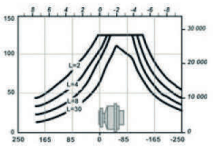

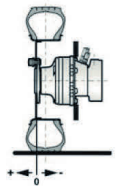

PMS/PMSE11 轴马达 PMS/PMSE11 Shaft Motor

单排量马达（2A50）标准尺寸 /Dimensions for standard(2A50)1-displacement motor

	F12
B	92.5
C	∅ 273.6
D	25

重量 /Weight	88kg	114kg

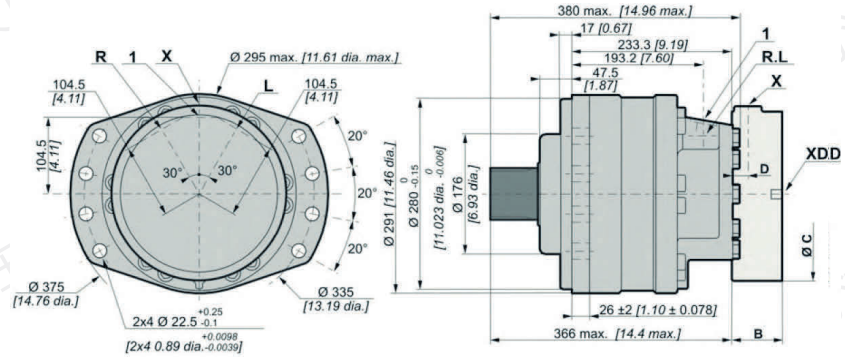

双排量马达（2A50 ）标准尺寸 /Dimensions for standard(2A50)2-displacement motor

	F12
B	92.5
C	∅ 273.6
D	25

重量 /Weight	88kg	114kg

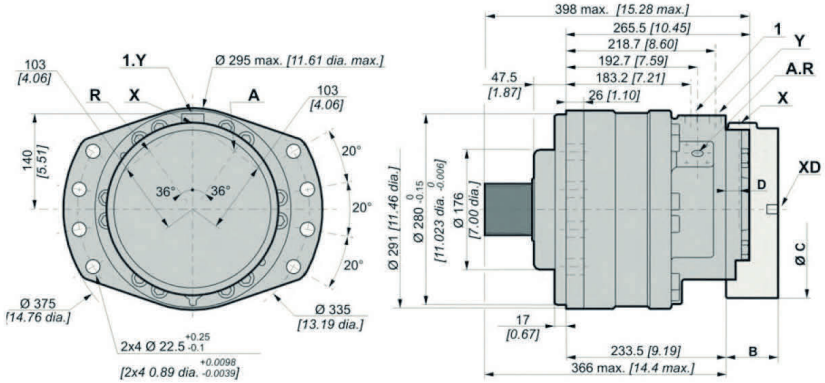

输出轴形式 /Shaft Options

2 A 5 0		A	B	C	D	E	F
DIN 5480 花键 DIN 5480 splines							
公称直径 /Nominal ∅	80	15	R2.75	35	2×M10	23	80
模数 /Module	3						
Z	25						

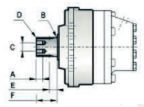

负载曲线 /Load Curves

部件的使用寿命受压力的影响，所以必须核实应用到部件上的合力（轴向载荷 / 径向载荷）应与部件承受载荷的允许值相协调一致，并且这些部件的最终使用寿命应遵守其应用规范。

The service life of the components is influenced by the pressure. You must check that the combination of forces applied(Axial load/ Radial load) is compatible with the permissible loads for the components,and that the resulting service lives of these components complies with the application's specifications.

径向载荷允许值 Permissible radial loads

试验条件 Test conditions:

静态 /Static: 0 r/min 0bar

动态 :0 r/min，标准排量，最大扭矩时无轴向载荷
Dynamic: 0 r/min code 0 displacement,without axial load at max.torque

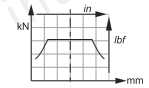

轴承寿命 Service life of bearings

试验条件 Test conditions:

L: 150bars（平均压力）时，百万转（B10），采用 25cSt 流体，标准排量，无轴向载荷
L: Millions B10 revolutions at 150 bars(average prssure),with 25cSt fluid，code 0 displacement,without axial load

G
101.25
2 A 5 0

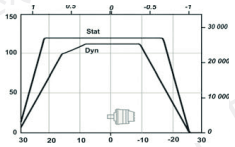

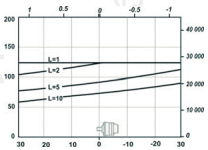

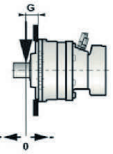

油口形式 /Distributor

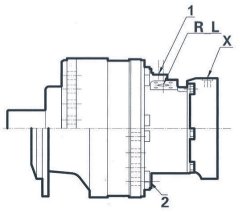

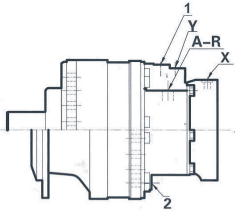

	旧标准 Old standards	标准 Standards		主油口 Power supply	变量油口 Displacement control	壳体泄油口 Case drain	驻车制动控制油口 Control of parking break
				A_RIR_L	Y	1.2	X
A	SAE J514	ISO 11926-1		1"1/16-12 UNF	9/16"-18 UNF	3/4"-16 UNF	9/16"-18 UNF
3	ISO 6162	ISO 6162	A	DN19 PN400	M16x1.5	M18×1.5	M18×1.5
	DIN3852	ISO 9974-1	B	DN13 PN400			
	NF E48050	ISO 9974-1		M27×2			
最高压力 Max.pressure	PS / PSE	bar		450	30	1	30
				400			

A: 全排量 First displacement B: 半排量 Second displacement

效率 /Efficiency

总效率 /Overall efficiency

在 50℃时，使用 HV46 液压油标准排量马达工作 100 小时后的平均值

Average values given for guidance for code 0 displacement after 100 hours of operation withHV46 hydraulic fluid at 50℃

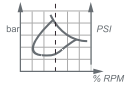

实际输出扭矩 /Actual output torque

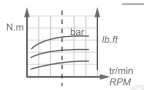

PMS11

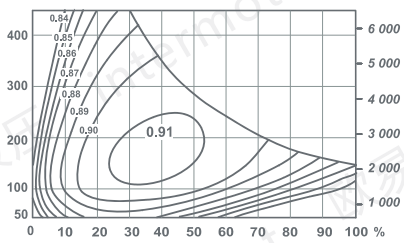

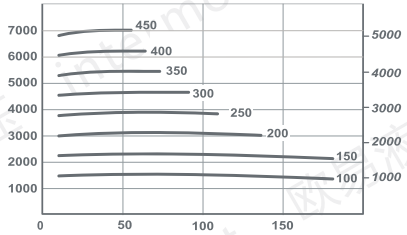

PMSE11

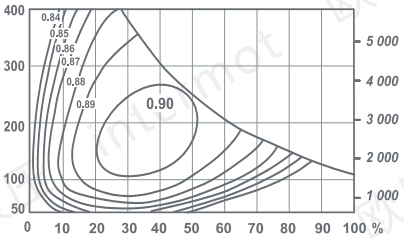

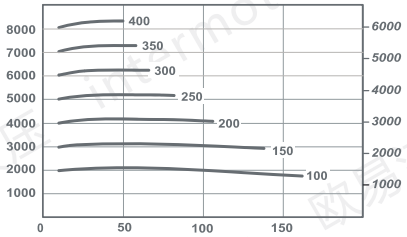

制动器原理 /Brake principle

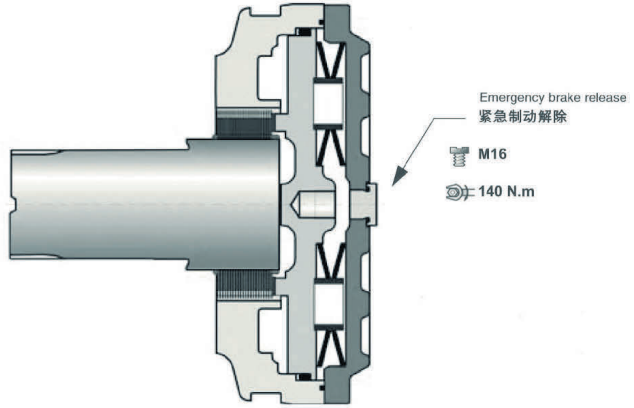

制动器原理 /Brake principle

在失压状态下多片式制动器起作用。弹簧对制动片产生作用力，该力使制动片抱紧转轴，制动扭矩与释放压力成正比。

This is a multidisc brake which is activated by a lack of pressure.The spring exerts a force on the piston ,which presses on the fixed and mobile discs,and immobilizes the shaft.The braking torque decreases in linear proportion to the brake release pressure.

	F 1 2
制动腔内压为为 0 时制动器的制动扭矩（新制动器）Parking brake torque at 0 bars on housing (new brake)	7320 Nm
制动腔内压力为 0 时紧急制动扭矩（最多可作紧急制动使用 10 次） Dynamic emergency braking torque at 0 bars on housing(max.10 uses of emergency brakes)	4760 Nm
制动腔内压力为 0 时剩余的驻车制动扭矩 *Residual parking braking at 0 bars on housing*	5490 Nm
最小的制动器释放压力 Min.brake release pressure	15 bar
最大的制动器释放压力 Max.brake release pressure	30 bar
油量 Oil capacity	170 ml
用于制动器释放液压油量 Volume for brake release	40 ml

* 作为紧急制动使用后 After emergency brake has been used

(!) 制动时不要运转马达。Do not run in multidisc brakes.

(!) 每当驻车制动器作为辅助性制动（或紧急制动器）使用时，都要对驻车制动器进行功能上的检查。
A functional check of the parking brake must be carried out each time it is used as an auxiliary brake (or emergency brake).

PMS/PMSE18
技术参数表 /Technical Parameter

A: 全排量 First displacement B: 半排量 Second displacement

产品型号 Type	排量代号 Displacement Code	A	B	理论扭矩 Theoretical Torque	最大功率 Max.Power			最大转速 Max.Speed		最高压力 Max.Pressure
				A	A	B 优先旋向 Preferred	B 非优先旋向 /Non-Preferred	A	B	
		ml/r	ml/r	100bar N.m	kW	kW	kW	r/min		bar
PMS18	6	1091	546	1735	70	47	35	170	170	450
	8	1395	698	2218				155	160	
	9	1571	786	2498				140	155	
	0	1747	874	2778				125	150	
	1	1911	956	3038				115	135	
	2	2099	1050	3337				100	125	
PMSE18	0	2340	1170	3721	70	47	35	90	110	400
	1	2560	1280	4070				85	100	
	2	2812	1406	4471				75	90	

产品标识说明 /Ordering Code

*****_ * _*** _*** _****_****

1 | 2 | 3 4 5 | 6 | 7 | 8

1、马达型号 Moter type
PMS/PMSE18

2、排量代号 Displacement Code
PMS18: 6, 8, 9, 0, 1, 2
PMSE18: 0, 1, 2

3、配流体形式 Valving type

单排量配流体	1
对称型配流体	A 排量比 2
	B 排量比 <2
	C 排量比 >2
双排量和配流体（顺时针方向）	D 排量比 2
	E 排量比 <2
	F 排量比 >2
双排量和配流体（逆时针方向）	G 排量比 2
	H 排量比 <2
	J 排量比 >2

4、安装法兰形式 Mounting options

S18	不带安装法兰 Without mounting	1	1	4
	带安装法兰 With mounting	2	2	5
S35	不带安装法兰 Without mounting	B		
	带安装法兰 With mounting	C		
		单排量 1-Disp.	双排量 2-Disp.	热交换阀 Exchange

5、油口形式 Distributor

0	无配流体端盖 No transmission cover
1	ISO 9974-1 连接 /ISO 9974-1 Connection
	ISO 6162 法兰 /ISO 6162 Flange DN19
4	ISO1179-1 连接 /ISO9974-1 Connection

6、制动器 Brake

S18 SE18	无制动器 Without brake		A18
	带制动器 Brakes	轴承支撑安装或配流体端盖 Bearing mounting or valving cover mounting 驻车制动器 Parking brake	F19
	无制动器（加强端盖） Without brake(reinforced plate)		R18
S35	无制动器 Without brake		A35
	无制动器（加强端盖） Without brake(reinforced plate)		R35

7、输出轴形式 Shaft options
0- 无轴承支撑 /Without bearing support
1- 无安装法兰 /Without mounting
2- 带安装法兰 /Lug mounting

8、附加项 Additional items

0	无选项 With Options or Adaptations
1	氟化橡胶密封 Fluorinated elastomer seals
3	不带机械解除制动的端盖 Brake environmental cover without plug
5	泄油口（配流系统侧加泄漏油口） Drainage(additional drain on valving systems)
6	工业轴承支撑 Industrial bearing support
8	预留速度传感器位置 Predisposition for speed sensor
A	空心轴 Hollow shaft
B	轴承支撑上带泄油口 Drain on the bearing support
C	恶劣工况 Abrasive environment
D	特殊喷漆或无喷漆 Special paint or no paint
E	加强轴封 Reinforced sealing
G	特殊轮辋安装 Special wheel rim mounting
J	加强轴肩 Reinforced bearing stop
K	加强轴 Reinforced shaft
M	高速 Hight speed

0- 无鼓式制动器/\ Without drum brakes
1- 无螺栓 /Without studs
2- 螺栓螺母 /With studs+nuts
3- 螺栓 /With studs
4-M 螺纹孔 /M threaded holes

伸出轴 /Male shaft
5- 伸出轴 DIN5480 花键
Male shaft din5480 splines

0- 无伸出轴 /Without shaft
1-10x Ø 24, Ø 225
2-8x Ø 22, Ø 275
3-10x Ø 24, Ø 225
A- 伸出轴承支撑
For male shaft bearing support

PMS/PMSE18 轮边马达 PMS/PMSE18 Wheel Motor

单排量马达（1210）标准尺寸 /Dimensions for standard(1110)1-displacement motor

	F19
B	98.5
C	Ø 250
D	45
E	121.5

重量 /Weight	130kg	160kg

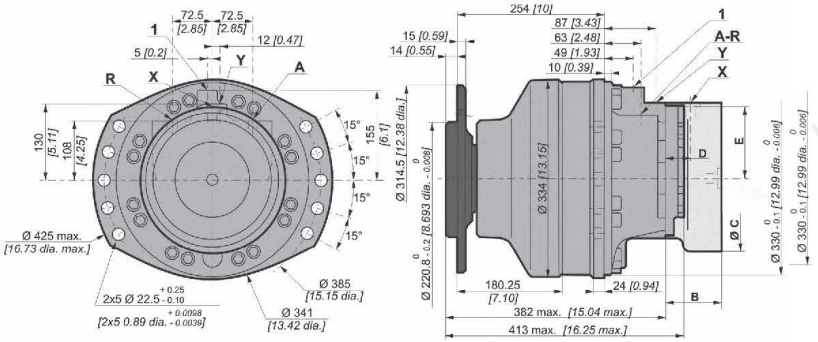

双排量马达（1210）标准尺寸 /Dimensions for standard(1110)2-displacement motor

	F19
B	98.5
C	Ø 250
D	45
E	121.5

重量 /Weight	130kg	160kg

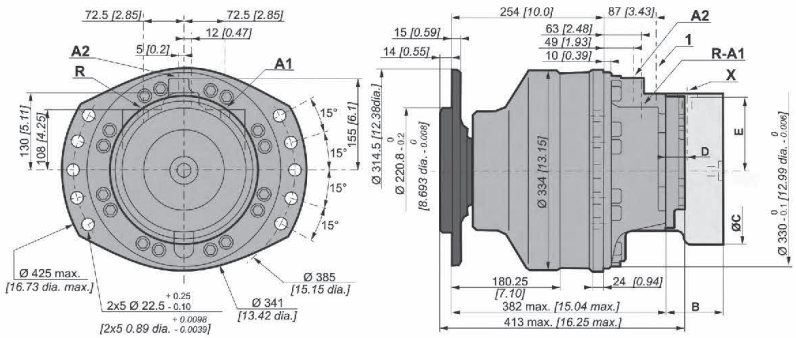

输出轴形式 /Shaft Options

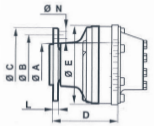

	A	B	C	D	E	N	轮辋安装 Wheel rim mountings	L
1 1 1 0	Ø 175.7	Ø 225	Ø 265	253.5	Ø 334	Ø 24	10×M22×1.5	14

螺栓 /Studs

各种螺栓 Various studs	螺栓尺寸 Studs size	P	C min.	C max.	D	等级 CLASS	扭矩 (1)* Torque	扭矩 (2)* Torque
		mm	mm	mm	mm		N.m	N.m
	M22×1.5	65	5	24	26	12.9	695	1050
		80		29				
							轮胎 /Tire	钢轮 /Drum

(*): 紧固扭矩是针对指定载荷给出的。

The tightening torques are given for the indicated loads.

(1): 轮辋: 轮辋安装紧固扭矩建议值 (>240 N/mm²)。

Wheel rim:Suggested tightening torque for wheel rim mountings(Re steel disc>240 Nmm²)。

(2): 标准: 其它安装方式紧固扭矩建议值 (>360 N/mm²)。

Standard:Suggested tightening torque in other cases(Re steel flange >360 N/mm²)。

负载曲线 /Load Curves

部件的使用寿命受压力的影响，所以必须核实应用到部件上的合力（轴向载荷 / 径向载荷）应与部件承受载荷的允许值相协调一致，并且这些部件的最终使用寿命应遵守其应用规范。

The service life of the components is influenced by the pressure. You must check that the combination of forces applied(Axial load/ Radial load) is compatible with the permissible loads for the components,and that the resulting service lives of these components complies with the application's specifications.

径向载荷允许值 Permissible radial loads

试验条件 Test conditions:

静态 /Static: 0 r/min 0 bar

动态 :0 r/min，标准排量，最大扭矩时无轴向载荷 Dynamic: 0 r/min code 0 displacement,without axial load at max.torque

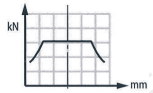

轴承寿命 Service life of bearings

试验条件 Test conditions:

L:150bars（平均压力）时，百万转（B10），采用 25cSt 流体，标准排量，无轴向载荷

L: Millions B10 revolutions at 150 bars(average prssure),with 25cSt fluid，code 0 displacement,without axial load

1 1 1 0			

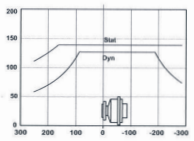

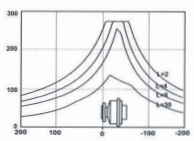

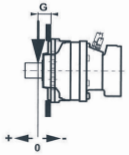

PMS/PMSE18 轴马达 PMS/PMSE18 Shaft Motor

单排量马达（2A50）标准尺寸 /Dimensions for standard(2A50)1-displacement motor

	F19
B	98.5
C	Ø 250
D	45
E	121.5

重量 /Weight	112kg	142kg

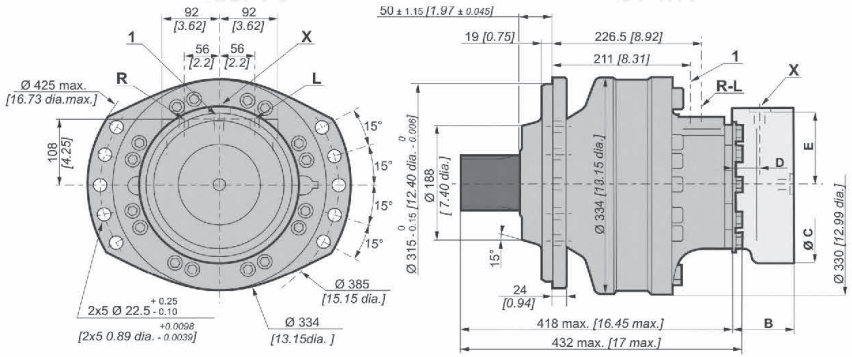

双排量马达（2A50）标准尺寸 /Dimensions for standard(2A50)2-displacement motor

	F19
B	98.5
C	Ø 250
D	45
E	121.5

重量 /Weight	112kg	152kg

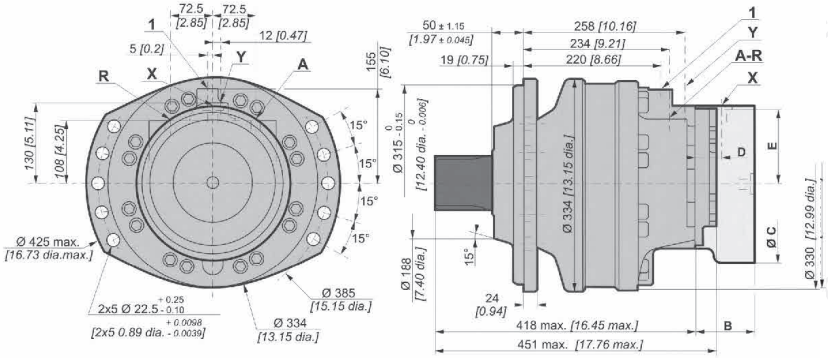

输出轴形式 /Shaft Options

2 A 5 0		A	B	C	D	E	F
DIN 5480 花键 DIN 5480 splines							
公称直径 /Nominal ∅	90	23	R3	35	2×M14	23	90
模数 /Module	3						
Z	28						

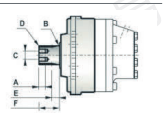

负载曲线 /Load Curves

部件的使用寿命受压力的影响，所以必须核实应用到部件上的合力（轴向载荷 / 径向载荷）应与部件承受载荷的允许值相协调一致，并且这些部件的最终使用寿命应遵守其应用规范。

The service life of the components is influenced by the pressure. You must check that the combination of forces applied(Axial load/ Radial load) is compatible with the permissible loads for the components,and that the resulting service lives of these components complies with the application's specifications.

径向载荷允许值 Permissible radial loads

试验条件 Test conditions:

静态 /Static: 0 r/min 0bar

动态 :0 r/min，标准排量，最大扭矩时无轴向载荷
Dynamic: 0 r/min code 0 displacement,without axial load at max.torque

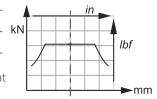

轴承寿命 Service life of bearings

试验条件 Test conditions:

L:150bars（平均压力）时，百万转（B10），采用 25cSt 流体，标准排量，无轴向载荷
L: Millions B10 revolutions at 150 bars(average prssure),with 25cSt fluid，code 0 displacement,without axial load

G
106.5

2 A 5 0

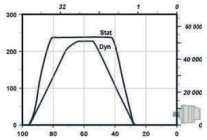

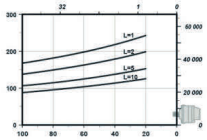

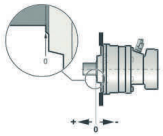

油口形式 /Distributor

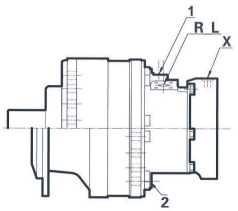

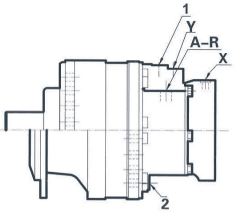

	旧标准 Old standards	标准 Standards		主油口 Power supply	变量油口 Displacement control	壳体泄油口 Case drain	驻车制动控制油口 Control of parking break
				A_RIR_L	Y	1.2	X
1	DIN 3852	ISO 6162-1 ISO 9974-1	S18	DN19 PN400	M16x1.5	M22×1.5	M22×1.5
	DIN3852		S35 2C	DN25 PN400	M18×1.5		
4	NF E48050	ISO 9974-1		M27×1.5	M16x1.5		
					M22×1.5		
最高压力 Max.pressure	PS	bar		450	30	1	30
	PSE			400			

效率 /Efficiency

总效率 /Overall efficiency

在 50℃时，使用 HV46 液压油标准排量马达工作 100 小时后的平均值

Average values given for guidance for code 0 displacement after 100 hours of operation with HV46 hydraulic fluid at 50℃

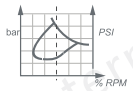

实际输出扭矩 /Actual output torque

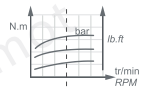

PMS/PMSE18

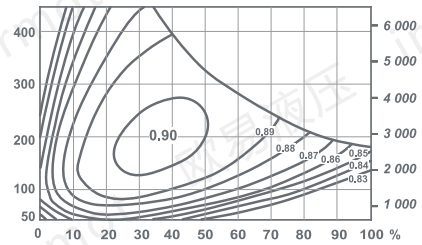

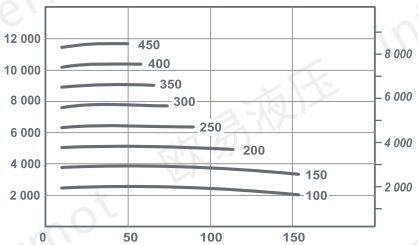

PMS/PMSE18

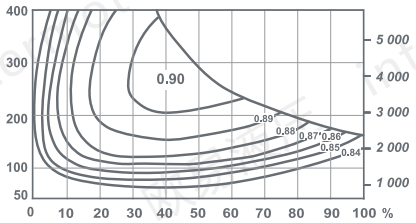

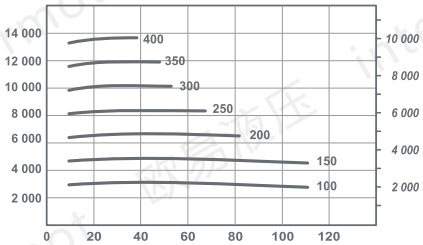

驻动制动器 /Brakes

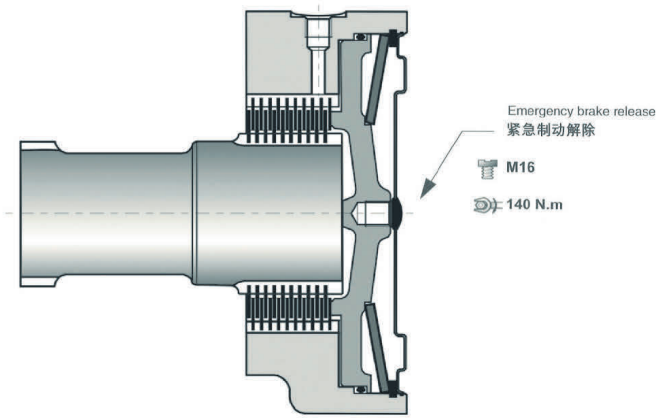

制动器原理 /Brake principle

在失压状态下多片式制动器起作用。弹簧对制动片产生作用力，该力使制动片抱紧转轴，制动扭矩与释放压力成正比。

This is a multidisc brake which is activated by a lack of pressure. The spring exerts a force on the piston ,which presses on the fixed and mobile discs,and immobilizes the shaft.The braking torque decreases in linear proportion to the brake release pressure.

	F 1 9
制动腔内压为为 0 时制动器的制动扭矩（新制动器） Parking brake torque at 0 bars on housing (new brake	18600 Nm
制动腔内压力为 0 时紧急制动扭矩（最多可作紧急制动使用 10 次） Dynamic emergency braking torque at 0 bars on housing(max.10 uses of emergency brakes)	12800 Nm
制动腔内压力为 0 时剩余的驻车制动扭矩 * Residual parking braking at 0 bars on housing*	13940 Nm
最小的制动器释放压力 Min.brake release pressure	15 bar
最大的制动器释放压力 Max.brake release pressure	30 bar
油量 Oil capacity	180ml
用于制动器释放液压油量 Volume for brake release	70 ml

* 作为紧急制动使用后 After emergency brake has been used

(!) 制动时不要运转马达。Do not run in multidisc brakes.o

(!) 每当驻车制动器作为辅助性制动（或紧急制动器）使用时，都要对驻车制动器进行功能上的检查。
A functional check of the parking brake must be carried out each time it is used as an auxiliary brake (or emergency brake).

PMS35
技术参数表 /Technical Parameter

A: 全排量 First displacement B: 半排量 Second displacement

产品型号 Type	排量代号 Displacement Code	A	B	理论扭矩 Theoretical Torque A	最大功率 Max.Power A	B 优先旋向 Preferred	B 非优先旋向 /Non-Preferred	最大转速 Max.Speed A	B	最高压力 Max.Pressure
		ml/r	ml/r	100bar N.m	kW	kW	kW	r/min		bar
PMS35	7	2439	1220	3878	110	73	55	140	140	450
	9	3143	1572	4997				140	140	
	0	3494	1747	5555				130	130	
	2	4198	2099	6675				110	110	

产品标识说明 /Ordering Code

*****_ * _*** _*** _**** _****

1 2 3 4 5 6 7 * * * 0 8

1、马达型号 Moter type
PMS35

2、排量代号 Displacement Code

产品型号 Type	排量代号 Displacement Code	ml/r	ml/r
PMS35	7	2439	1220
	9	3143	1572
	0	3494	1747
	2	4198	2099

3、配流体形式 Valving type

单排量配流体	1
对称型配流体	A 排量比 2
	B 排量比 <2
	C 排量比 >2
双排量和配流体（顺时针方向）	D 排量比 2
	E 排量比 <2
	F 排量比 >2
双排量和配流体（逆时针方向）	G 排量比 2
	H 排量比 <2
	J 排量比 >2

4、安装法兰形式 Mounting options

不带安装法兰 Without mounting	1	1	4
带安装法兰 With mounting	2	2	5
	单排量 1-Disp.	双排量 2-Disp	

5、油口形式 Distributor

1	ISO 6149-1 连接 /ISO6149-1 Connection
A	ISO 6162 法兰 /ISO 6162 Flange
	ISO11926-1 连接 /ISO11926-1 Connection

6、制动器 Brake

A35——无制动器（普通端盖）/Without brake(simple plate)
F42——带制动器 /With brake
R35——无制动器（加强端盖）/Without brake(reinforced plate)

8、附加项 Additional items

0	无选项 With Options or Adaptations
1	氟化橡胶密封 Fluorinated elastomer seals
6	工业轴承支撑 Industrial bearing support
8	预留速度传感器位置 Predisposition for speed sensor
A	空心轴 Hollow shaft
B	轴承支撑上带泄油口 Drain on the bearing support
C	恶劣工况 Abrasive environment
D	特殊喷漆或无喷漆 Special paint or no pain
E	加强轴封 Reinforced sealing
G	特殊轮辋安装 Special wheel rim mounting
J	加强轴肩 Reinforced bearing stop

7、输出轴形式 Shaft options

0- 无鼓式制动器 /Without drum brakes

1- 无螺栓 /Without studs
2- 螺栓螺母 /With studs+nuts
3- 螺栓 /With studs
4-M 螺纹孔 /M threaded holes

伸出轴 /Male shaft

5- 伸出轴 DIN5480 花键
Male shaft din5480 splines

0- 无伸出轴 /Without shaft
1-10x ∅ 24，∅ 335
3-8x ∅ 22，∅ 275
4-8x ∅ 17.5，∅ 235
5-12x ∅ 22，∅ 275
A- 伸出轴承支撑
For male shaft bearing support

0- 无轴承支撑 Without bearing support
1- 无安装法兰 Without mounting
2- 带安装法兰 /Lug mounting

intermot 欧易液压

PMS/PMSE
PMS/PMSE02
PMS/PMSE05
PMS/PMSE08
PMS/PMSE11
PMS/PMSE18
PMS35
PMS50
PMS83
PMS125

PMS35 轮边马达 PMS35 Wheel Motor

单排量马达（1110）标准尺寸 /Dimensions for standard(1110)1-displacement motor

	F42
B	148
C	Ø 375
D	63.5
E	183.5

重量 /Weight	209kg	269kg

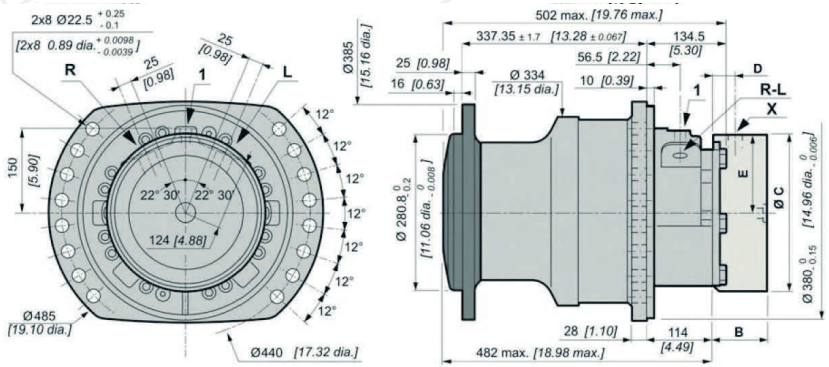

双排量马达（1110）标准尺寸 /Dimensions for standard(1110)2-displacement motor

	F42
B	148
C	Ø 375
D	63.5
E	183.5

重量 /Weight	209kg	269kg

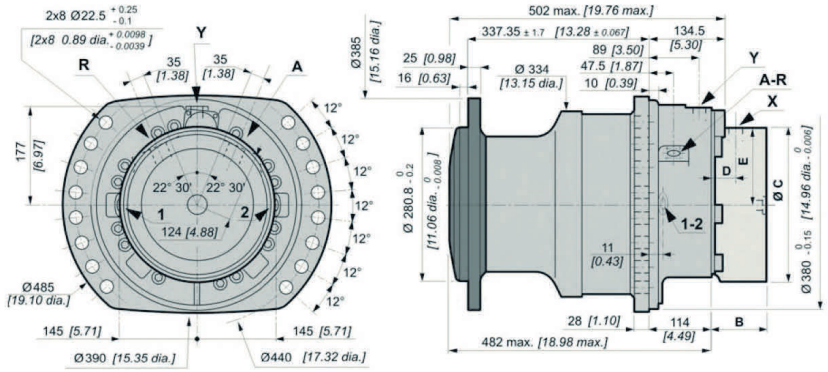

输出轴形式 /Shaft Options

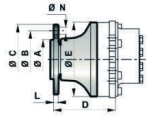

	A	B	C	D	E	N	轮辋安装 Wheel rim mountings	L
1 1 1 0	Ø 280.8	Ø 335	Ø 386	319	Ø 334	Ø 24	10×M22×1.5	24

螺栓 /Studs

各种螺栓 Various studs	螺栓尺寸 Studs size	P	C min.	C max.	D	等级 CLASS	扭矩 (1)* Torque	扭矩 (2)* Torque
		mm	mm	mm	mm		N.m	N.m
	M16x1.5	50	5		21	12.9	695	1050
	M20x1.5	60			25			
	M20x1.5	70						
	M22x1.5	80			26			
							轮胎 /Tire	钢轮 /Drum

（ * ）：紧固扭矩是针对指定载荷给出的。

The tightening torques are given for the indicated loads.

（ 1 ）：轮辋：轮辋安装紧固扭矩建议值 (>240 N/mm²)。

Wheel rim:Suggested tightening torque for wheel rim mountings(Re steel disc>240 Nmm²)。

（ 2 ）：标准：其它安装方式紧固扭矩建议值 (>360 N/mm²) 。

Standard:Suggested tightening torque in other cases(Re steel flange >360 N/mm²)。

负载曲线 /Load Curves

部件的使用寿命受压力的影响，所以必须核实应用到部件上的合力（轴向载荷 / 径向载荷）应与部件承受载荷的允许值相协调一致，并且这些部件的最终使用寿命应遵守其应用规范。

The service life of the components is influenced by the pressure. You must check that the combination of forces applied(Axial load/ Radial load) is compatible with the permissible loads for the components,and that the resulting service lives of these components complies with the application's specifications.

径向载荷允许值 Permissible radial loads

试验条件 Test conditions:

静态 /Static: 0 r/min 0 bar

动态 :0 r/min，标准排量，最大扭矩时无轴向载荷 Dynamic: 0 r/min code 0 displacement,without axial load at max.torque

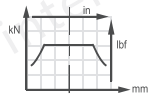

轴承寿命 Service life of bearings

试验条件 Test conditions:

L: 150bars(平均压力) 时，百万转（B10），采用 25cSt 流体，标准排量，无轴向载荷

L: Millions B10 revolutions at 150 bars(average prssure),with 25cSt fluid,code 0 displacement,without axial load

1 1 1 0

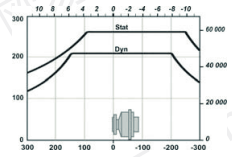

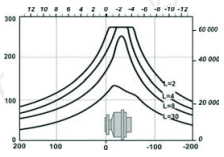

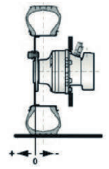

PMS35 轴马达 PMS35 Shaft Motor

单排量马达（2A50）标准尺寸 /Dimensions for standard(2A50)1-displacement motor

	F42
B	148
C	Ø 375
D	63.5
E	183.5

重量 /Weight	188kg	248kg

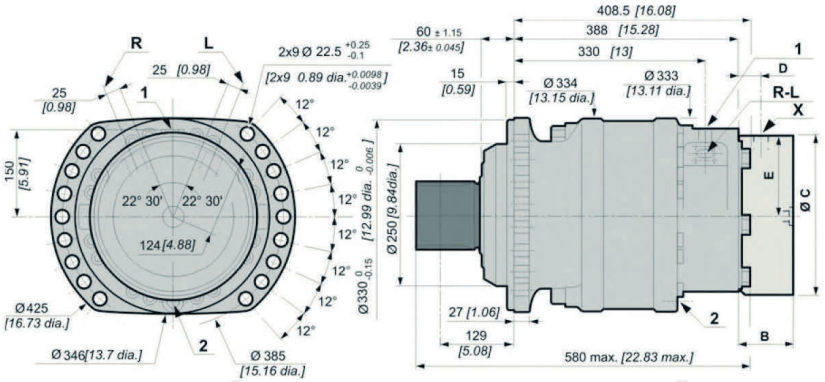

双排量马达（2A50）标准尺寸 /Dimensions for standard(12A50)2-displacement motor

	F42
B	148
C	Ø 375
D	63.5
E	183.5

重量 /Weight	188kg	248kg

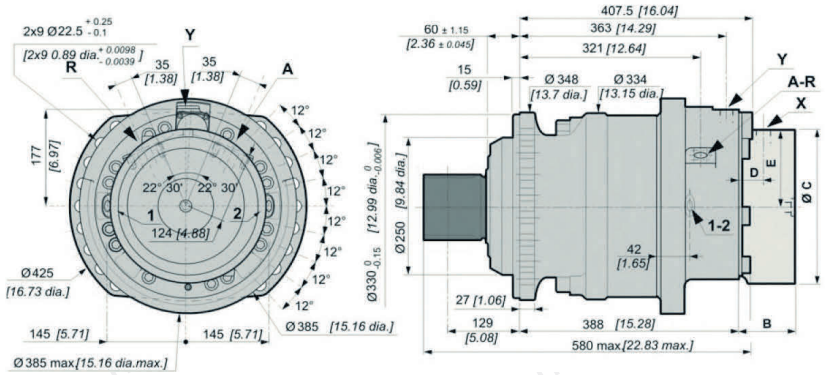

输出轴形式 /Shaft Options

2 A 5 0		A	B	C	D	E	F
DIN 5480 花键 DIN 5480 splines							
公称直径 /Nominal Ø	120						
模数 /Module	5						
Z	22	40	R3	60	2×M16	28	110

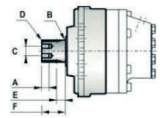

负载曲线 /Load Curves

部件的使用寿命受压力的影响，所以必须核实应用到部件上的合力（轴向载荷 / 径向载荷）应与部件承受载荷的允许值相协调一致，并且这些部件的最终使用寿命应遵守其应用规范。

The service life of the components is influenced by the pressure. You must check that the combination of forces applied(Axial load/ Radial load) is compatible with the permissible loads for the components,and that the resulting service lives of these components complies with the application's specifications.

径向载荷允许值 Permissible radial loads

试验条件 /Test conditions:

静态 /Static: 0 r/min 0bar

动态 :0 r/min，标准排量，最大扭矩时无轴向载荷
Dynamic: 0 r/min code 0 displacement,without axial

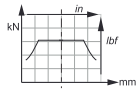

轴承寿命 Service life of bearings

试验条件 /Test conditions:

L: 150bars（平均压力）时，百万转（B10），采用 25cSt 流体，标准排量，无轴向载荷
L: Millions B10 revolutions at 150 bars(average prssure),with 25cSt fluid,code 0 displacement,without axial load

2 A 5 0

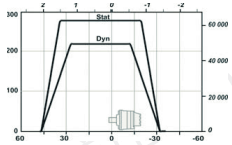

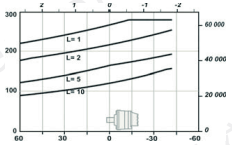

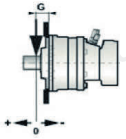

油口形式 /Distributor

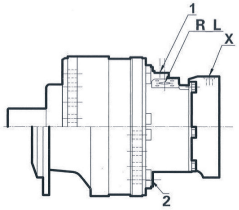

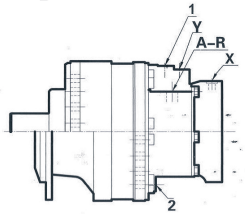

	旧标准 Old standards	标准 Standards		主油口 Power supply	变量油口 Displacement control	壳体泄油口 Case drain	驻车制动控制油口 Control of parking break
				R_L	Y	1.2	X
1	ISO 6162	ISO 6162-1	S18	DN19 PN400	M18×1.5	M22×1.5	M16×1.5
	DIN 3852	ISO 9974-1	S35 2C	DN25 PN400	M18×1.5		
最高压力 Max.pressure	PS / PSE	bar		450	30	1	30
				400			

PMS50
技术参数表 /Technical Parameter

A: 全排量 First displacement B: 半排量 Second displacement

产品型号 Type	排量代号 Displacement Code	A	B	理论扭矩 Theoretical Torque	最大功率 Max.Power			最大转速 Max.Speed		最高压力 Max.Pressure
				A	A	B 优先旋向Preferred	B 非优先旋向 /Non-Preferred	A	B	
		ml/r	ml/r	100bar N.m	kW	kW	kW	r/min		bar
PMS50	7	3500	1750	5565	140	93	70	200	140	450
	8	4008	2004	6373				180	140	
	9	4498	2249	7152				160	130	
	0	4997	2499	7945				145	110	
	1	5504	2752	8751				130	130	
	2	6011	3006	9557				120	110	

产品标识说明 /Ordering Code

*****_ * _*** _*** _****_****

1 | 2 | 3 4 5 | 6 | 7 | 8

1、马达型号 Moter type
PMS50

2、排量代号 Displacement Code

产品型号 Type	排量代号 Displacement Code	ml/r	ml/r
PMS50	7	3500	1750
	8	4008	2004
	9	4498	2249
	0	4997	2499
	1	5504	2752
	2	6011	3006

3、配流体形式 Valving type

单排量配流体	1
对称型配流体	A 排量比 2
	B 排量比 <2
	C 排量比 >2
双排量和配流体（顺时针方向）	D 排量比 2
	E 排量比 <2
	F 排量比 >2
双排量和配流体（逆时针方向）	G 排量比 2
	H 排量比 <2
	J 排量比 >2

4、安装法兰形式 Mounting options

不带安装法兰 Without mounting	1	1
带安装法兰 With mounting	2	2
不带安装法兰 Without mounting	B	1
带安装法兰 With mounting	C	2
	单排量 1-Disp.	双排量 2-Disp

5、油口形式 Distributor

0	无配流体端盖 No transmission cover
1	ISO 9974-1. 连接 /ISO 9974-1 Connection
	ISO DP6162 法兰 /ISO DP6162 Flange

6、制动器 Brake

无制动器 Without brake			A50
带制动器	轴承支撑安装或配流体端盖 Bearing mounting or valving cover mounting	驻车制动器 Parking brake	F50
无制动器（加强端盖）Without brake(reinforced plate)			R50
无制动器 Without brake			A50
无制动器（加强端盖）Without brake(reinforced plate)			R50

8、附加项 Additional items

0	无选项 With Options or Adaptations
1	氟化橡胶密封 Fluorinated elastomer seals
3	不带机械解除制动的端盖 Brake environmental cover without plug
5	泄油口（配流系统附加泄漏油口） Drainage(additional drain on valving systems)
6	工业轴承支撑 Industrial bearing support
8	预留速度传感器位置 Predisposition for speed sensor
A	空心轴 Hollow shaft
B	轴承支撑上带泄油口 Drain on the bearing support
E	加强轴封 Reinforced sealing
G	特殊轮圈安装 Special wheel rim mounting
J	加强轴肩 Reinforced bearing stop

7、输出轴形式 Shaft options

0- 无鼓式制动器 /Without drum brakes

1- 无螺栓 /Without studs
2- 螺栓螺母 With studs+nuts
3- 螺栓 /With studs
4-M 螺纹孔 /M threaded holes

伸出轴 /Male shaft

5- 伸出轴 DIN5480 花键
Male shaft din5480 splines

0- 无伸出轴 /Without shaft
1-12×Ø 26，Ø 425
3-10×Ø 24，Ø 335
4-10×Ø 24，Ø 335
5-12×Ø 25，Ø 275
A- 伸出轴承支撑
For male shaft bearing support

0- 无轴承支撑 /Without bearing support
1- 无安装法兰 /Without mounting
2- 带安装法兰 /Lug mounting

PMS50 轮边马达 PMS50 Shaft Motor

单排量马达（1110）标准尺寸 /Dimensions for standard(1110)1-displacement motor

	F50
B	157.5
C	Ø 375
D	63.5
E	183.5

重量 /Weight	310kg	415kg

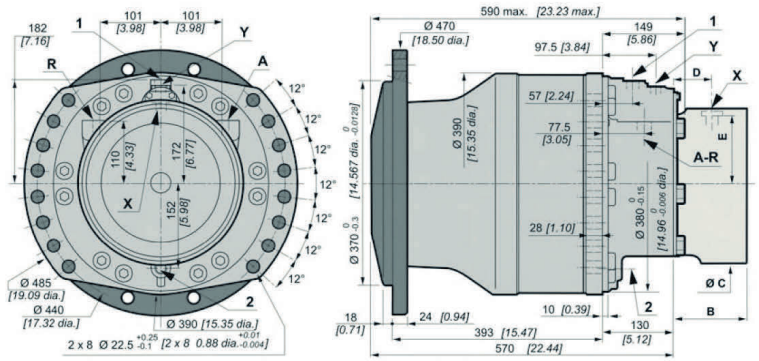

双排量马达（1110）标准尺寸 /Dimensions for standard(1110)2-displacement motor

	F50
B	157.5
C	Ø 375
D	63.5
E	183.5

重量 /Weight	310kg	415kg

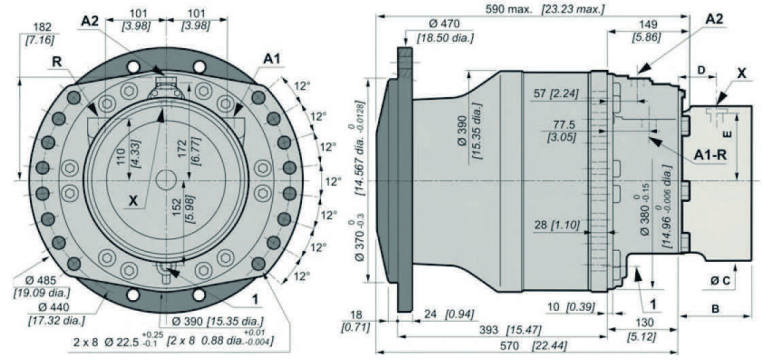

输出轴形式 /Shaft Options

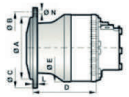

	A	B	C	D	E	N	轮辋安装 Wheel rim mountings	L
1 1 1 0	∅ 370	∅ 425	∅ 472	393	∅ 390	∅ 26	12×M24×2	24

螺栓 /Studs

各种螺栓 Various studs	螺栓尺寸 Studs size	P	C min.	C max.	D	等级 CLASS	扭矩 (1)* Torque	扭矩 (2)* Torque
		mm	mm	mm	mm		N.m	N.m
	M22×1.5	80	5	36	26	12.9	695	1050
	M24×2	95		38	30			
							轮胎 /Tire	钢轮 /Drum

(*): 紧固扭矩是针对指定载荷给出的。

The tightening torques are given for the indicated loads.

(1): 轮辋: 轮辋安装紧固扭矩建议值（>240 N/mm²）。

Wheel rim:Suggested tightening torque for wheel rim mountings(Re steel disc>240 N/mm²)。

(2): 标准: 其它安装方式紧固扭矩建议值（>360 N/mm²）。

Standard:Suggested tightening torque in other cases(Re steel flange >360 N/mm²)。

负载曲线 /Load Curves

部件的使用寿命受压力的影响，所以必须核实应用到部件上的合力（轴向载荷 / 径向载荷）应与部件承受载荷的允许值相协调一致，并且这些部件的最终使用寿命应遵守其应用规范。

The service life of the components is influenced by the pressure. You must check that the combination of forces applied(Axial load/ Radial load) is compatible with the permissible loads for the components,and that the resulting service lives of these components complies with the application's specifications.

径向载荷允许值 Permissible radial loads

试验条件 /Test conditions:

静态 /Static: 0 r/min 0bar

动态 :0 r/min，标准排量，最大扭矩时无轴向载荷 Dynamic: 0 r/min code 0 displacement,without axial load at max.torque

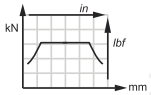

轴承寿命 Service life of bearings

试验条件 /Test conditions:

L: 150bars(平均压力）时，百万转（B10），采用 25cSt 流体，标准排量，无轴向载荷

L: Millions B10 revolutions at 150 bars(average prssure),with 25cSt fluid,code 0 displacement,without axial load

1 1 1 0

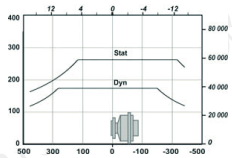

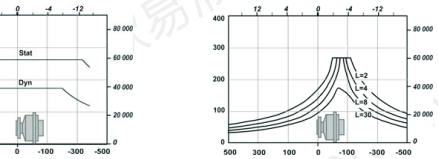

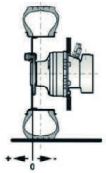

PMS50 轴马达 PMS50 Shaft Motor

单排量马达（2A50）标准尺寸 /Dimensions for standard(2A50)1-displacement motor

	F50
B	157.5
C	∅ 375
D	63.5
E	183.5

重量 /Weight	265kg	370kg

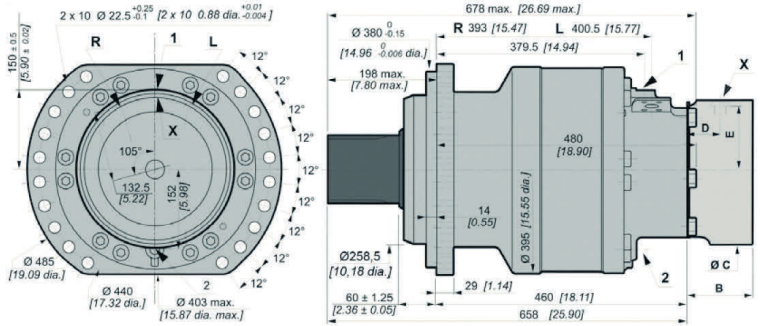

双排量马达（2A50）标准尺寸 /Dimensions for standard(12A50)2-displacement motor

	F50
B	157.5
C	∅ 375
D	63.5
E	183.5

重量 /Weight	265kg	370kg

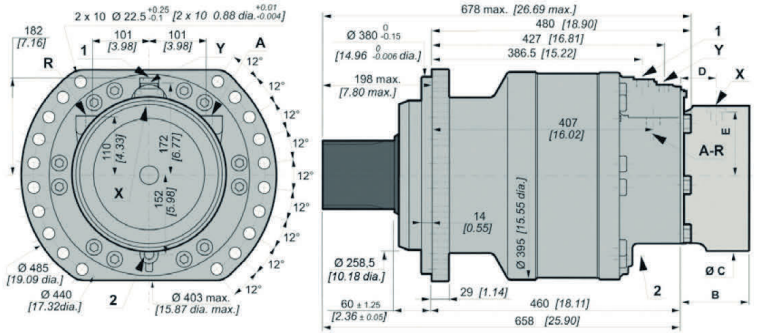

输出轴形式 /Shaft Options

2 A 5 0		A	B	C	D	E	F
DIN 5480 花键 DIN 5480 splines							
公称直径 /Nominal ∅	130	40	R4	60	2×M16	32	136
模数 /Module	5						
Z	24						

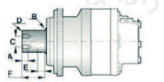

负载曲线 /Load Curves

部件的使用寿命受压力的影响，所以必须核实应用到部件上的合力（轴向载荷 / 径向载荷）应与部件承受载荷的允许值相协调一致，并且这些部件的最终使用寿命应遵守其应用规范。

The service life of the components is influenced by the pressure. You must check that the combination of forces applied(Axial load/ Radial load) is compatible with the permissible loads for the components,and that the resulting service lives of these components complies with the application's specifications.

径向载荷允许值 Permissible radial loads

试验条件 Test conditions:

静态 /Static: 0 r/min 0bar

动态 :0 r/min，标准排量，最大扭矩时无轴向载荷
Dynamic: 0 r/min code 0 displacement,without axial

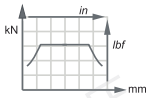

轴承寿命 Service life of bearings

试验条件 /Test conditions:

L: 150bars（平均压力）时，百万转（B10），采用 25cSt 流体，标准排量，无轴向载荷
L: Millions B10 revolutions at 150 bars(average prssure),with 25cSt fluid,code 0 displacement,without axial load

G
129
2 A 5 0

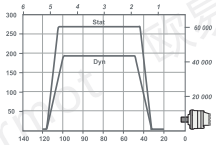

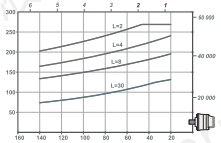

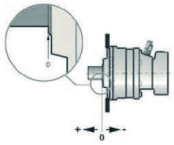

油口形式 /Distributor

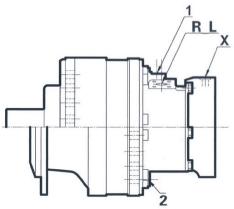

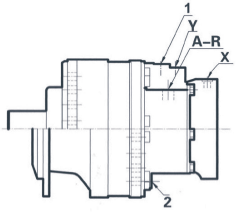

	旧标准 Old standards	标准 Standards		主油口 Power supply	变量油口 Displacement control	壳体泄油口 Case drain	驻车制动控制油口 Control of parking break
				A_RIR_L	Y	1.2	X
1	ISO 6162	ISO 6162 DIN 3852	S18	DN19 PN400	M18×1.5	M22×1.5	M18×1.5
	DIN 3852		S35 2C	DN25 PN400	M18×1.5		
最高压力 Max.pressure	PS / PSE	bar		450 / 400	30	1	30

效率 /Efficiency

总效率 /Overall efficiency

在 50℃时，使用 HV46 液压没标准排量马达工作 100 小时后的平均值

Average values given for guidance for code 0 displacement after 100 hours of operation withHV46 hydraulic fluid at 50℃

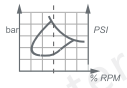

实际输出扭矩 /Actual output torque

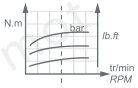

PMS50

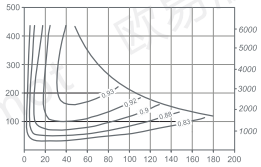

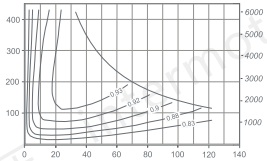

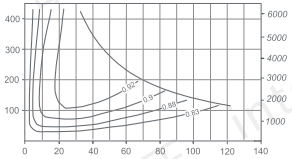

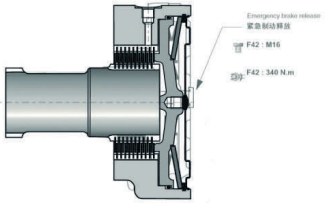

驻动制动器 /Brakes

在失压状态下多片式制动器起作用。弹簧对制动片产生作用力，该力使制动片抱紧转轴，制动扭矩与释放压力成正比。

This is a multidisc brake which is activated by a lack of pressure.The spring exerts a force on the piston ,which presses on the fixed and mobile discs,and immobilizes the shaft.The braking torque decreases in linear proportion to the brake release pressure.

	F 5 0
制动腔内压为为 0 时制动器的制动扭矩（新制动器） Parking brake torque at 0 bars on housing (new brake)	20900Nm
制动腔内压力为 0 时紧急制动扭矩（最多可作紧急制动使用 10 次） Dynamic emergency braking torque at 0 bars on housing(max.10 uses of emergency brakes)	13325 Nm
制动腔内压力为 0 时剩余的驻车制动扭矩 * Residual parking braking at 0 bars on housing*	15375 Nm
最小的制动器释放压力 Min.brake release pressure	12 bar
最大的制动器释放压力 Max.brake release pressure	30 bar
油量 Oil capacity	700ml
用于制动器释放液压油量 Volume for brake release	70ml

* 作为紧急制动使用后 After emergency brake has been used

ⓘ 制动时不要运转马达。Do not run in multidisc brakes.

ⓘ 每当驻车制动器作为辅助性制动（或紧急制动器）使用时，都要对驻车制动器进行功能上的检查。
A functional check of the parking brake must be carried out each time it is used as an auxiliary brake (or emergency brake).

PMS83

技术参数表 /Technical Parameter

A: 全排量 First displacement B: 半排量 Second displacement

产品型号 Type	排量代号 Displacement Code	A	B	理论扭矩 Theoretical Torque	最大功率 Max.Power			最大转速 Max.Speed	最高压力 Max.Pressure
				A	A	B 优先旋向 /Preferred			
		ml/r	ml/r	100bar N.m	KW	KW		r/min	bar
PMS83	8	6679	3340	10620	200	135		200	450
	0	8328	4164	13242				160	
	2	10019	5010	15930				130	

产品标识说明 /Ordering Code

*****_ * _*** _*** _****_****

1	2	3 4 5	6	7	8
				• • • 0	

1、马达型号 Moter type
PMS83

2、排量代号 Displacement Code

产品型号 Type	排量代号 Displacement Code	A ml/r	B ml/r
PMS83	8	6679	3340
	0	8328	4164
	2	10019	5010

3、配流体形式 Valving type

单排量配流体		1
对称	排量比 2	A
	排量比 <2	B
	排量比 >2	C

4、安装法兰形式 Mounting options

不带安装法兰 Without mounting	B
带安装法兰 With mounting	C
	单排量 1-Disp.

5、油口形式 Distributor

0	无配流体端盖 No transmission cover
1	ISO 9974-1. 连接 /ISO 9974-1 Connection
	ISO DP6162 法兰 /ISO DP6162 Flange

6、制动器 Brake

无制动器（加强端盖）Without brake			R83
带制动器	轴承支撑安装或配流体端盖 Bearing mounting or valving cover mounting	驻车制动器 Parking brake	T80

8、附加项 Additional items

0	无选项 With Options or Adaptations
1	氟化橡胶密封 Fluorinated elastomer seals
3	不带机械解除制动的端盖 Brake environmental cover without plug
5	泄油口（配流系统附加泄漏油口） Drainage(additional drain on valving systems)
6	工业轴承支撑 Industrial bearing support
8	预留速度传感器位置 Predisposition for speed sensor
A	空心轴 Hollow shaft
B	轴承支撑上带泄油口 Drain on the bearing support
E	加强轴封 Reinforced sealing
G	特殊轮辋安装 Special wheel rim mounting
J	加强轴肩 Reinforced bearing stop

7、输出轴形式 Shaft options

0- 无鼓式制动器 /Without drum brakes

0- 无轴
1- 无螺栓 /Without studs
2- 螺栓螺母 With studs+nuts
3- 螺栓 /With studs

伸出轴 /Male shaft

5- 伸出轴 DIN5480 花键
Male shaft din5480 splines

0- 无伸出轴 /Without shaft
3-24×∅ 24x2x95，∅425
A- 伸出轴承支撑
For male shaft bearing support

0- 无轴承支撑 /Without bearing support
1- 无安装法兰 /Without mounting
2- 带安装法兰 /Lug mounting

PMS 83 轮边马达 PMS 83 Wheel Motor

单排量马达 -(1310) 标准尺寸 /Dimensions for standard(1310)1-displacement motor

重量 /Weight	450kg	610kg

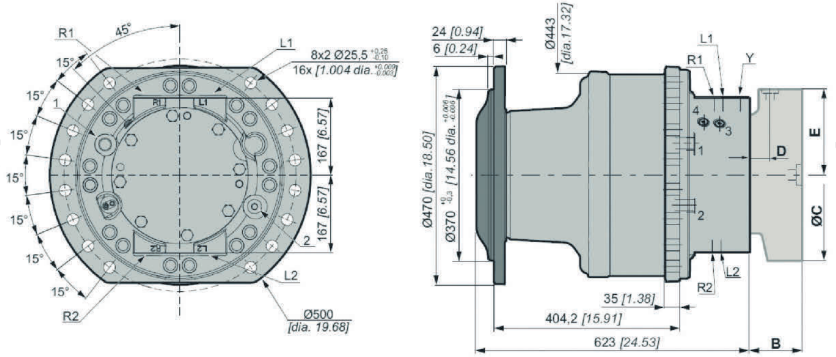

双排量马达（1310）标准尺寸 /Dimensions for standard(1310)2-displacement motor

重量 /Weight	450kg	600kg

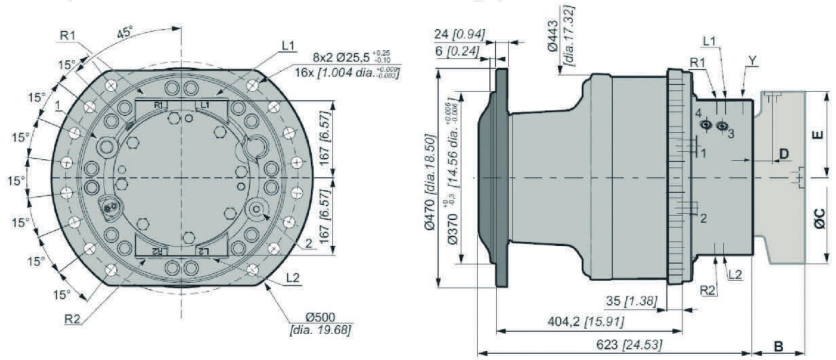

欧易液压 intermot

输出轴形式 /Shaft Options

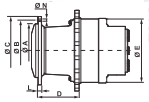

	A	B	C	D	E	N	轮辋安装 Wheel rim mountings	L
1 3 1 0	370	425	470	404.2	444	26	24xM24x2	24

螺栓 /Studs

各种螺栓 Various studs	螺栓尺寸 Studs size	P	C min.	C max.	D	等级 CLASS	扭矩 (1)* Torque	扭矩 (2)* Torque
		mm	mm	mm	mm		N.m	N.m
	M24×2	95	5	39	30	12.9	695	1050
	M24×2	115		59				
							轮胎 /Tire	钢轮 /Drum

（ * ）：紧固扭矩是针对指定载荷给出的。

The tightening torques are given for the indicated loads.

（ 1 ）：轮辋：轮辋安装紧固扭矩建议值（>240 N/mm²）。

Wheel rim:Suggested tightening torque for wheel rim mountings(Re steel disc>240 N/mm²)。

（ 2 ）：标准：其它安装方式紧固扭矩建议值（>360 N/mm²）。

Standard:Suggested tightening torque in other cases(Re steel flange >360 N/mm²)。

负载曲线 /Load Curves

部件的使用寿命受压力的影响，所以必须核实应用到部件上的合力（轴向载荷 / 径向载荷）应与部件承受载荷的允许值相协调一致，并且这些部件的最终使用寿命应遵守其应用规范。

The service life of the components is influenced by the pressure. You must check that the combination of forces applied(Axial load/ Radial load) is compatible with the permissible loads for the components,and that the resulting service lives of these components complies with the application's specifications.

径向载荷允许值 Permissible radial loads

试验条件 /Test conditions:

静态 /Static: 0 r/min 0bar

动态 :0 r/min，标准排量，最大扭矩时无轴向载荷 Dynamic: 0 r/min code 0 displacement,without axial load at max.torque

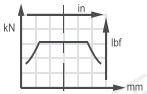

轴承寿命 Service life of bearings

试验条件 /Test conditions:

L: 150bars(平均压力）时，百万转（B10），采用 25cSt 流体，标准排量，无轴向载荷

L: Millions B10 revolutions at 150 bars(average prssure),with 25cSt fluid,code 0 displacement,without axial load

1 3 1 0

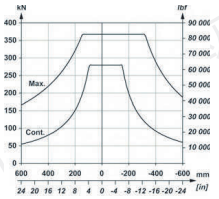

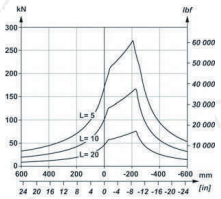

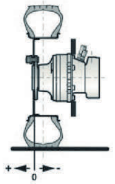

PMS 83 轴马达 PMS 83 Shaft Motor

单排量马达（3A50）标准尺寸 /Dimensions for standard(3A50)1-displacement motor

重量 /Weight	112kg	142kg

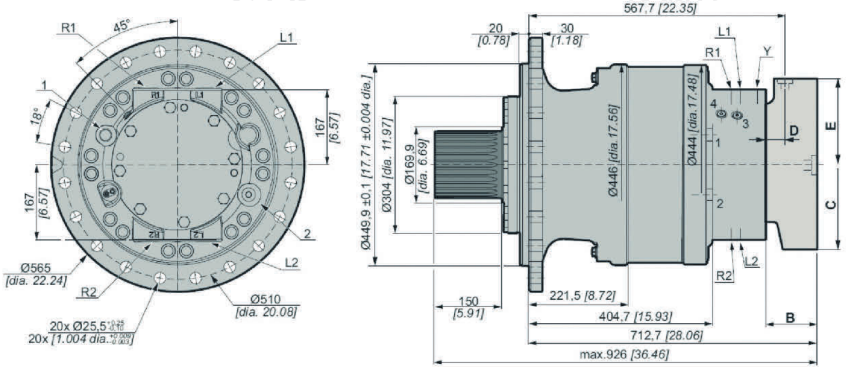

双排量马达（3A50）标准尺寸 /Dimensions for standard(3A50)2-displacement motor

重量 /Weight	112kg	152kg

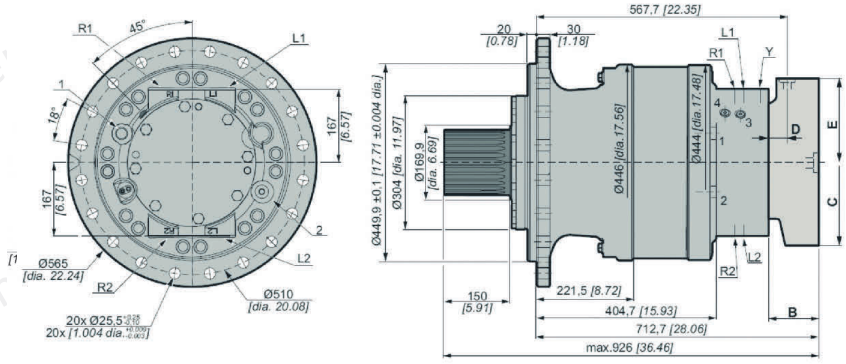

输出轴形式 /Shaft Options

3 A 5 0		A	B	C	D	E	F
DIN 5480 花键 DIN 5480 splines							
公称直径 /Nominal ∅	150	40	R4	60	2×M16	32	150
模数 /Module	5						
Z	28						

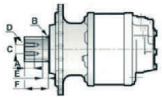

负载曲线 /Load Curves

部件的使用寿命受压力的影响，所以必须核实应用到部件上的合力（轴向载荷 / 径向载荷）应与部件承受载荷的允许值相协调一致，并且这些部件的最终使用寿命应遵守其应用规范。

The service life of the components is influenced by the pressure. You must check that the combination of forces applied(Axial load/ Radial load) is compatible with the permissible loads for the components,and that the resulting service lives of these components complies with the application's specifications.

径向载荷允许值 Permissible radial loads

试验条件 Test conditions:
静态 /Static: 0 r/min 0bar
动态 :0 r/min，标准排量，最大扭矩时无轴向载荷 Dynamic: 0 r/min code 0 displacement,without axial

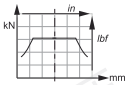

轴承寿命 Service life of bearings

试验条件 /Test conditions:
L: 150bars（平均压力）时，百万转（B10），采用 25cSt 流体，标准排量，无轴向载荷 L: Millions B10 revolutions at 150 bars(average prssure),with 25cSt fluid,code 0 displacement,without axial load

3 A 5 0

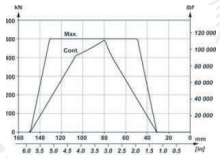

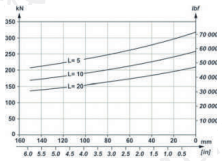

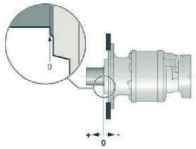

油口形式 /Distributor

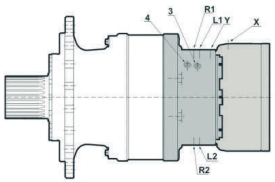

	旧标准 Old standards	标准 Standards	主油口 Power supply	变量油口 Displacement control	壳体泄油口 Case drain	驻车制动控制油口 Control of parking break
			R_L	Y	1.2	X
1	Metric Gaz (BSPP)	ISO 9974-1	DN32 PN400	M18×1.5	M27×2	M18×1.5
		ISO 1179-1		17	27	17
最高压力 Max.pressure	MS bar		450	30	1	30

效率 /Efficiency

总效率 /Overall efficiency

在 50℃时，使用 HV46 液压没标准排量马达工作 100 小时后的平均值

Average values given for guidance for code 0 displacement after 100 hours of operation withHV46 hydraulic fluid at 50℃

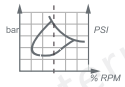

实际输出扭矩 /Actual output torque

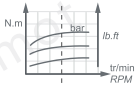

PMS83

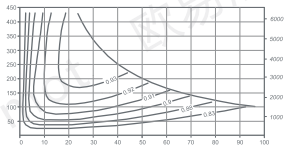

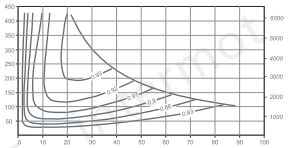

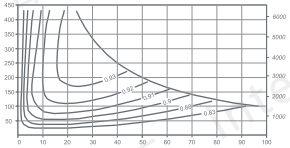

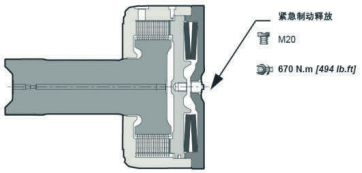

驻动制动器 /Brakes

在失压状态下多片式制动器起作用。弹簧对制动片产生作用力，该力使制动片抱紧转轴，制动扭矩与释放压力成正比。

This is a multidisc brake which is activated by a lack of pressure.The spring exerts a force on the piston ,which presses on the fixed and mobile discs,and immobilizes the shaft.The braking torque decreases in linear proportion to the brake release pressure.

	T 8 0
制动腔内压为为 0 时制动器的制动扭矩（新制动器） Parking brake torque at 0 bars on housing (new brake)	72000Nm
制动腔内压力为 0 时紧急制动扭矩（最多可作紧急制动使用 10 次） Dynamic emergency braking torque at 0 bars on housing(max.10 uses of emergency brakes)	62400 Nm
制动腔内压力为 0 时剩余的驻车制动扭矩 * Residual parking braking at 0 bars on housing*	54000 Nm
最小的制动器释放压力 Min.brake release pressure	20 bar
最大的制动器释放压力 Max.brake release pressure	30 bar
油量 Oil capacity	450ml
用于制动器释放液压油量 Volume for brake release	135ml

* 作为紧急制动使用后 After emergency brake has been used

① 制动时不要运转马达。Do not run in multidisc brakes.

① 每当驻车制动器作为辅助性制动（或紧急制动器）使用时，都要对驻车制动器进行功能上的检查。
A functional check of the parking brake must be carried out each time it is used as an auxiliary brake (or emergency brake).

欧易液压 intermot

PMS/PMSE125
技术参数表 /Technical Parameter

A: 全排量 First displacement B: 半排量 Second displacement

产品型号 Type	排量代号 Displacement Code	A	B	理论扭矩 Theoretical Torque	最大功率 Max.Power			最大转速 Max.Speed	最高压力 Max.Pressure
				A	A	B 优先旋向 /Preferred			
		ml/r	ml/r	100bar N.m	KW	KW		r/min	bar
PMS125	8	10000	5000	15900	240	160		130	450
	0	12500	6250	19875				105	
	2	15000	7500	23850				85	

产品标识说明 /Ordering Code

*****_ * _*** _*** _**** _****

1 | 2 | 3 4 5 | 6 | 7 (* * * 0) | 8

1、马达型号 Moter type
PMS125

2、排量代号 Displacement Code

产品型号 Type	排量代号 Displacement Code	A ml/r	B ml/r
PMS125	8	10000	5000
	0	12500	6250
	2	15000	7500

3、配流体形式 Valving type

单排量配流体		1
对称	排量比 2	A
	排量比 <2	B
	排量比 >2	C

4、安装法兰形式 Mounting options

不带安装法兰 Without mounting	B
带安装法兰 With mounting	C
	单排量 1-Disp.

5、油口形式 Distributor

0	无配流体端盖 No transmission cover
1	ISO 9974-1. 连接 /ISO 9974-1 Connection
	ISO DP6162 法兰 /ISO DP6162 Flange

6、制动器 Brake

无制动器（加强端盖）Without brake			R83
带制动器	轴承支撑安装或配流体端盖 Bearing mounting or valving cover mounting	驻车制动器 Parking brake	T80

8、附加项 Additional items

0	无选项 With Options or Adaptations
1	氟化橡胶密封 Fluorinated elastomer seals
3	不带机械解除制动的端盖 Brake environmental cover without plug
5	泄油口（配流系统附加泄漏油口）Drainage(additional drain on valving systems)
6	工业轴承支撑 Industrial bearing support
8	预留速度传感器位置 Predisposition for speed sensor
A	空心轴 Hollow shaft
B	轴承支撑上带泄油口 Drain on the bearing support
E	加强轴封 Reinforced sealing
G	特殊轮辋安装 Special wheel rim mounting
J	加强轴肩 Reinforced bearing stop

7、输出轴形式 Shaft options
0- 无鼓式制动器 /Without drum brakes

0- 无轴
1- 无螺栓 /Without studs
2- 螺栓螺母 With studs+nuts
3- 螺栓 /With studs

伸出轴 /Male shaft
5- 伸出轴 DIN5480 花键
Male shaft din5480 splines

3-24×∅ 24x2x115，∅425
4-24×∅ 24x2x95，∅425
A- 伸出轴承支撑
For male shaft bearing support

0- 无轴承支撑 /Without bearing support
1- 无安装法兰 /Without mounting
2- 带安装法兰 /Lug mounting

PMS 125 轮边马达 PMS 125 Wheel Motor

单排量马达 -(4311) 标准尺寸 /Dimensions for standard(4311)1-displacement motor

重量 /Weight	460kg	563kg

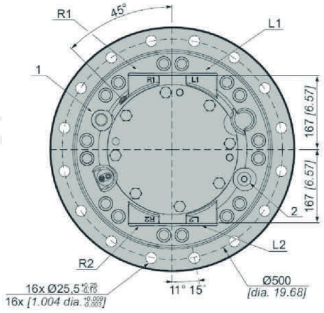

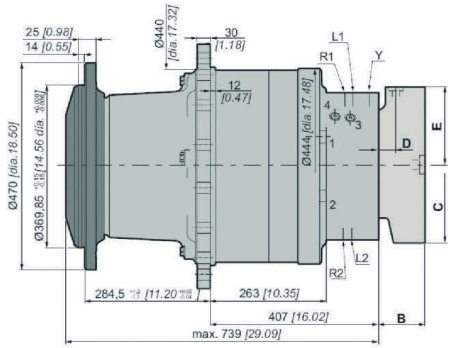

双排量马达（4311）标准尺寸 /Dimensions for standard(4311)2-displacement motor

重量 /Weight	460kg	563kg

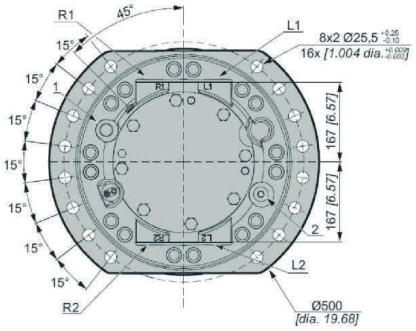

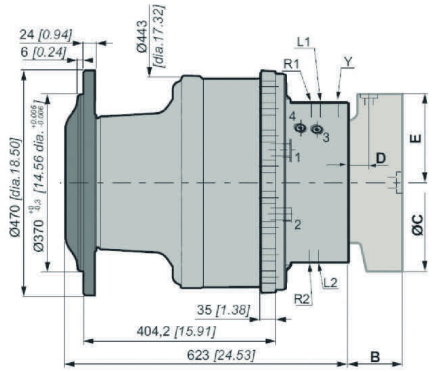

输出轴形式 /Shaft Options

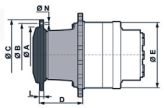

	A	B	C	D	E	N	轮辋安装 Wheel rim mountings	L
4 3 1 1	∅ 370	∅ 425	∅ 470	284	∅ 445	∅ 26	24×M24×2	26

螺栓 /Studs

各种螺栓 Various studs	螺栓尺寸 Studs size	P	C min.	C max.	D	等级 CLASS	扭矩 (1)* Torque	扭矩 (2)* Torque
		mm	mm	mm	mm		N.m	N.m
	M24×2	95	5	39	30	12.9	695	1050
		115		59				
	M24×2	-	-	-	-			
							轮胎 /Tire	钢轮 /Drum

(*): 紧固扭矩是针对指定载荷给出的。

The tightening torques are given for the indicated loads.

(1): 轮辋: 轮辋安装紧固扭矩建议值（>240 N/mm²）。

Wheel rim:Suggested tightening torque for wheel rim mountings(Re steel disc>240 N/mm²)。

(2): 标准: 其它安装方式紧固扭矩建议值（>360 N/mm²）。

Standard:Suggested tightening torque in other cases(Re steel flange >360 N/mm²)。

负载曲线 /Load Curves

部件的使用寿命受压力的影响，所以必须核实应用到部件上的合力（轴向载荷 / 径向载荷）应与部件承受载荷的允许值相协调一致，并且这些部件的最终使用寿命应遵守其应用规范。

The service life of the components is influenced by the pressure. You must check that the combination of forces applied(Axial load/ Radial load) is compatible with the permissible loads for the components,and that the resulting service lives of these components complies with the application's specifications.

径向载荷允许值 Permissible radial loads

试验条件 /Test conditions:

静态 /Static: 0 r/min 0bar

动态 :0 r/min，标准排量，最大扭矩时无轴向载荷 Dynamic: 0 r/min code 0 displacement,without axial load at max.torque

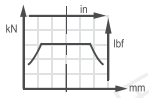

轴承寿命 Service life of bearings

试验条件 /Test conditions:

L: 150bars(平均压力）时，百万转（B10），采用 25cSt 流体，标准排量，无轴向载荷

L: Millions B10 revolutions at 150 bars(average prssure),with 25cSt fluid,code 0 displacement,without axial load

4 3 1 1

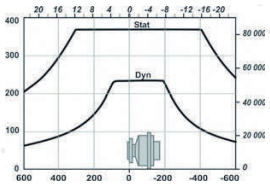

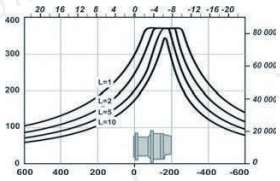

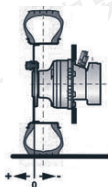

PMS 125 轴马达 PMS 125 Shaft Motor

单排量马达（3A51）标准尺寸 /Dimensions for standard(3A51)1-displacement motor

重量 /Weight	470kg	573kg

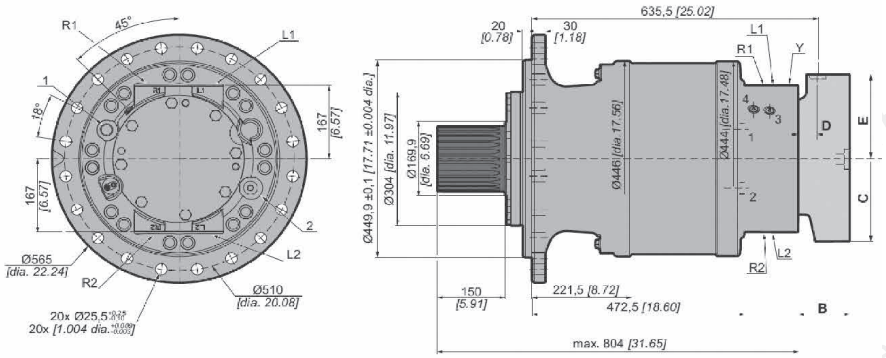

双排量马达（3A51）标准尺寸 /Dimensions for standard(3A51)2-displacement motor

重量 /Weight	470kg	573kg

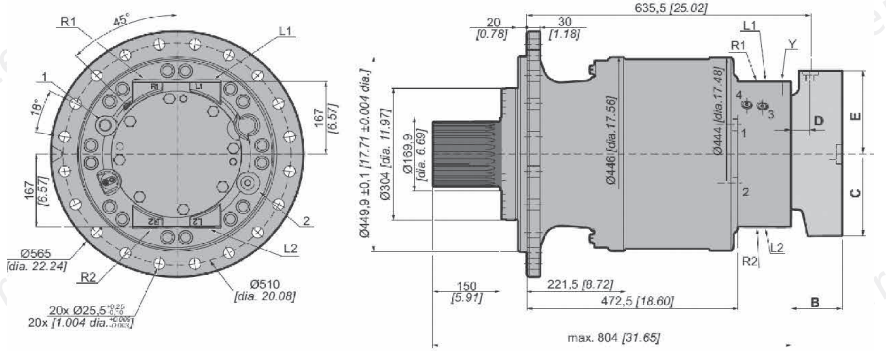

输出轴形式 /Shaft Options

3 A 5 1		A	B	C	D	E	F
DIN 5480 花键 DIN 5480 splines							
公称直径 /Nominal ∅	150	40	R4	60	2×M16	32	150
模数 /Module	5						
Z	28						

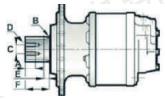

负载曲线 /Load Curves

部件的使用寿命受压力的影响，所以必须核实应用到部件上的合力（轴向载荷 / 径向载荷）应与部件承受载荷的允许值相协调一致，并且这些部件的最终使用寿命应遵守其应用规范。

The service life of the components is influenced by the pressure. You must check that the combination of forces applied(Axial load/ Radial load) is compatible with the permissible loads for the components,and that the resulting service lives of these components complies with the application's specifications.

径向载荷允许值 Permissible radial loads

试验条件 Test conditions:

静态 /Static: 0 r/min 0bar

动态 :0 r/min，标准排量，最大扭矩时无轴向载荷
Dynamic: 0 r/min code 0 displacement,without axial

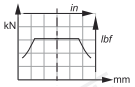

轴承寿命 Service life of bearings

试验条件 /Test conditions:

L: 150bars（平均压力）时，百万转（B10），采用 25cSt 流体，标准排量，无轴向载荷
L: Millions B10 revolutions at 150 bars(average prssure),with 25cSt fluid,code 0 displacement,without axial load

3 A 5 1

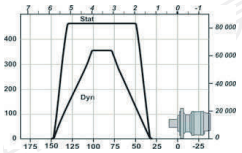

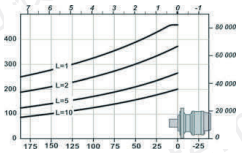

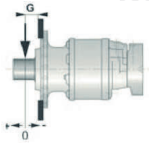

油口形式 /Distributor

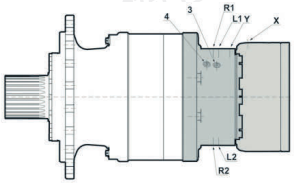

	旧标准 Old standards	标准 Standards		主油口 Power supply	变量油口 Displacement control	壳体泄油口 Case drain	驻车制动控制油口 Control of parking break
				R_L	Y	1.2	X
1	Metric Gaz (BSPP)	ISO 9974-1	S18	DN32 PN400	M18×1.5	M27×2	M18×1.5
		ISO 1179-1	S35 2C		17	27	17
最高压力 Max.pressure	MSbar			450	30	1	30

效率 /Efficiency

总效率 /Overall efficiency

在 50℃时，使用 HV46 液压没标准排量马达工作 100 小时后的平均值

Average values given for guidance for code 0 displacement after 100 hours of operation withHV46 hydraulic fluid at 50℃

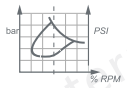

实际输出扭矩 /Actual output torque

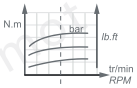

PMS83

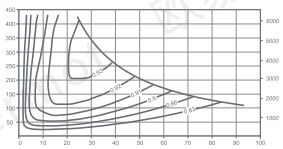

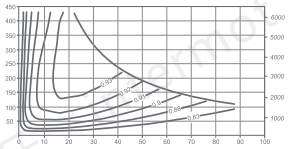

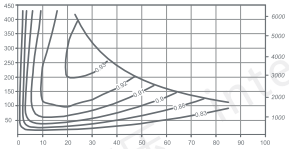

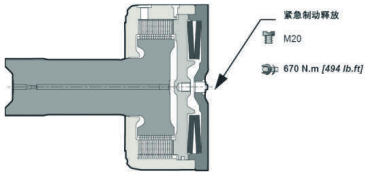

驻动制动器 /Brakes

在失压状态下多片式制动器起作用。弹簧对制动片产生作用力，该力使制动片抱紧转轴，制动扭矩与释放压力成正比。

This is a multidisc brake which is activated by a lack of pressure.The spring exerts a force on the piston ,which presses on the fixed and mobile discs,and immobilizes the shaft.The braking torque decreases in linear proportion to the brake release pressure.

T 8 0

制动腔内压为为 0 时制动器的制动扭矩（新制动器） Parking brake torque at 0 bars on housing (new brake)	72000Nm
制动腔内压力为 0 时紧急制动扭矩（最多可作紧急制动使用 10 次） Dynamic emergency braking torque at 0 bars on housing(max.10 uses of emergency brakes)	62400 Nm
制动腔内压力为 0 时剩余的驻车制动扭矩 * Residual parking braking at 0 bars on housing*	54000 Nm
最小的制动器释放压力 Min.brake release pressure	20 bar
最大的制动器释放压力 Max.brake release pressure	30 bar
油量 Oil capacity	450cm³
用于制动器释放液压油量 Volume for brake release	135cm³

* 作为紧急制动使用后 After emergency brake has been used

ⓘ 制动时不要运转马达。Do not run in multidisc brakes.

ⓘ 每当驻车制动器作为辅助性制动（或紧急制动器）使用时，都要对驻车制动器进行功能上的检查。
A functional check of the parking brake must be carried out each time it is used as an auxiliary brake (or emergency brake).

产品应用 APPLICATION

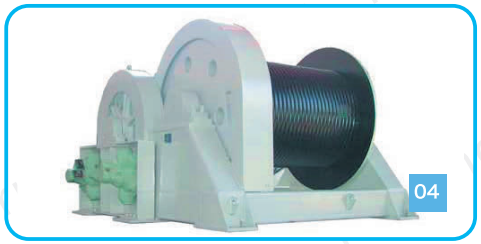

01 塑料机械 Plastic machinery
02 掘进机械 Boring machine
03 工程船舶 Engineering ship
04 液压绞车 Hydraulic winch
05 堆取料机 Stacker reclaimer
06 插板机 Spile Machine